EML 3262 Kinematics & Mechanism Design (3) – Spring 2005

Professor: Favel Gov
Office EAS 3234
Office hours: T 1400-1700;
R 1500-1700
Tel: (305) 348-2067
e-mail: govf@fiu.edu

Textbook: Machines & Mechanisms Applied Kinematic Analysis, David H. Myszka. 3rd Edition*.
Prentice Hall. 2000
* **See footnote**

References: Kinematics, Dynamics, and Design of Machinery, Waldron Kinzel, 2nd edition, Wiley.

Website: http://faculty.eng.fiu.edu/~govfavel/eml3262.html

Course Objectives

1. Identify mechanism by type of motion (planar, spatial), by degrees of freedom or by type of elements (double rocker, linkage, geared, etc..).
2. Graphically and analytically determine the position of all links in a mechanism, and the limiting position of the mechanism as the driver link(s) are displaced.
3. Using the relative velocity method, graphically and analytically determine the angular velocity of a link and the velocity of any point on a link, knowing the actuator's kinematic performance.
4. Using the relative acceleration method, graphically and analytically solve for the acceleration of a point on a link, knowing the actuator's kinematic performance.
5. Study the cam-follower mechanism: synthesis of the motion program for the follower and generation of cam profile.
6. Apply the analysis and synthesis method to design a mechanism for a specific case.

MME Educational Objectives related to this course

1. Broad and in-depth knowledge of engineering science and principles in the major fields of Mechanical Engineering for effective engineering practice, professional growth and as a base for life-long learning.
2. The ability to communicate effectively and to articulate technical matters using verbal, written and graphic techniques.

MME Program Outcomes related to this course

(a) Ability to apply knowledge of mathematics, science, and engineering
(e) Ability to identify, formulate, and solve engineering problems
(f) Understanding of professional and ethical responsibility
(h) Broad education necessary to understand the impact of engineering solutions in a global and societal context
(i) Recognition of the need for, and a ability to engage in life-long learning
(k) Ability to use the techniques, skills and modern engineering tools necessary for engineering practice.
(l) Knowledge of mathematics and of basic engineering science necessary to carry out analysis and design appropriate to mechanical engineering

Attendance Policy

Attendance is expected at all lectures, although it will not be checked. Proper learning of the course material can only be achieved through regular course attendance and an abundance of time spent completing all of the assigned homework and practicing the skills introduced in this course. Please be aware that the material is cumulative in this class, which means that you should try to make every effort in a timely manner.

Computer Usage

PRO-E / Mechanism is the preferred software for the elaboration of the assigned projects. Software such as Matlab, Mathematica, MathCad, or Autocad may be useful during the course.

Homeworks

Will be assigned and collected. These problems should be worked out at home because you might see them again on your quizzes. You must keep up with the homework in order to do well in class.

Quizes and Final Exam

Otherwise specified on class, <u>you need to bring</u> to the quizzes and to the final exam <u>only</u>:
A compass, a protractor, a ruler, a 45° triangle, a 60° triangle, a pencil and an eraser
A non programmable calculator (continued on next page)

---

* The 2nd edition is also good for this course. The differences between the editions will be remarked at class and homework tasks will be given for the 3rd as well as for the 2nd edition

EML 3262 Kinematics & Mechanism Design (3) – Spring 2005

Professor:	Favel Gov Office EAS 3234 Office hours: T 1400-1700; R 1500-1700 Tel: (305) 348-2067 e-mail: govf@fiu.edu	**Textbook:**	Machines & Mechanisms Applied Kinematic Analysis, David H. Myszka. 3rd Edition*. Prentice Hall. 2000 * **See footnote**
		References:	Kinematics, Dynamics, and Design of Machinery, Waldron Kinzel, 2nd edition, Wiley.

Website: http://faculty.eng.fiu.edu/~govfavel/eml3262.html

Course Objectives

1. Identify mechanism by type of motion (planar, spatial), by degrees of freedom or by type of elements (double rocker, linkage, geared, etc..).
2. Graphically and analytically determine the position of all links in a mechanism, and the limiting position of the mechanism as the driver link(s) are displaced.
3. Using the relative velocity method, graphically and analytically determine the angular velocity of a link and the velocity of any point on a link, knowing the actuator's kinematic performance.
4. Using the relative acceleration method, graphically and analytically solve for the acceleration of a point on a link, knowing the actuator's kinematic performance.
5. Study the cam-follower mechanism: synthesis of the motion program for the follower and generation of cam profile.
6. Apply the analysis and synthesis method to design a mechanism for a specific case.

MME Educational Objectives related to this course

1. Broad and in-depth knowledge of engineering science and principles in the major fields of Mechanical Engineering for effective engineering practice, professional growth and as a base for life-long learning.
2. The ability to communicate effectively and to articulate technical matters using verbal, written and graphic techniques.

MME Program Outcomes related to this course

(a) Ability to apply knowledge of mathematics, science, and engineering
(e) Ability to identify, formulate, and solve engineering problems
(f) Understanding of professional and ethical responsibility
(h) Broad education necessary to understand the impact of engineering solutions in a global and societal context
(i) Recognition of the need for, and a ability to engage in life-long learning
(k) Ability to use the techniques, skills and modern engineering tools necessary for engineering practice.
(l) Knowledge of mathematics and of basic engineering science necessary to carry out analysis and design appropriate to mechanical engineering

Attendance Policy

Attendance is expected at all lectures, although it will not be checked. Proper learning of the course material can only be achieved through regular course attendance and an abundance of time spent completing all of the assigned homework and practicing the skills introduced in this course. Please be aware that the material is cumulative in this class, which means that you should try to make every effort in a timely manner.

Computer Usage

PRO-E / Mechanism is the preferred software for the elaboration of the assigned projects. Software such as Matlab, Mathematica, MathCad, or Autocad may be useful during the course.

Homeworks

Will be assigned and collected. These problems should be worked out at home because you might see them again on your quizzes. You must keep up with the homework in order to do well in class.

Quizes and Final Exam

Otherwise specified on class, you need to bring to the quizzes and to the final exam only:

A compass, a protractor, a ruler, a 45° triangle, a 60° triangle, a pencil and an eraser

A non programmable calculator (continued on next page)

---

* The 2nd edition is also good for this course. The differences between the editions will be remarked at class and homework tasks will be given for the 3rd as well as for the 2nd edition

INTRODUCTION TO MECHANICS AND KINEMATICS

MECHANISM = A MECHANICAL PORTION OF A MACHINE THAT HAS THE FUNCTION OF TRANSFERING MOTION AND FORCES FROM A POWER SOURCE TO AN OUTPUT.
CONSIST OF CONNECTED PARTS WITH THE OBJECTIVE OF PRODUCING DESIRED MOTION.

KINEMATICS = THE WAY THINGS MOVE : STUDY OF THE GEOMETRY OF MOTION : POSITION, DUPLACEMENT, ROTATION, SPEED, VELOCITY, ACCELERATION.

TERMINOLOGY

LINKAGE = MECHANISM WHERE ALL PARTS ARE CONNECTED TOGETHER TO FORM A CLOSED CHAIN.

FRAME = ONE OF THE LINKAGE PARTS. - SERVES AS THE FRAME OF REFERENCE FOR THE MOTION OF ALL OTHER PARTS.

LINKS = INDIVIDUAL PARTS OF THE MECHANISM, CONSIDERED AS RIGID BODIES
SPRING, DAMPERS, MOTORS, ARE ~~EXCLUDED~~ IGNORED DURING KINEMATIC ANALYSIS.

JOINT = MOVEABE CONNECTION BETWEEN LINKS, ALLOWING RELATIVE MOTION BETWEEN THE LINKS

THERE ARE TWO PRIMARY JOINTS (FULL JOINTS):

REVOLUTE JOINT = PIN = HINGE JOINT

SLIDING JOINT = PISTON = PRISM JOINT

(ALWAYS ATTACHED)

CAM JOINT = ALLOWS ROTATIONAL + SLIDING BETWEEN THE TWO LINKS THAT IT CONNECTS

IT IS CALLED A "HIGHER-ORDER JOINT" AND OR "HALF JOINT"

↑ AS WELL AS A GEAR CONNECTION

SIMPLE LINK = A RIGID BODY THAT CONTAINS ONLY TWO JOINTS WHICH CONNECTS IT TO OTHER LINKS

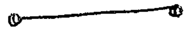

COMPLEX LINK = A RIGID BODY THAT CONTAINS MORE THAN TWO JOINTS

ROCKER ARM
BELL CRANK

A POINT OF INTEREST = A POINT ON A LINK OF SPECIAL INTEREST (ITS POSITION, VELOCITY, AND/OR ITS ACCELERATION)

ACTUATOR = COMPONENT THAT DRIVES THE MECHANISM (MOTORS, ENGINES, CYLINDERS, SOLENOIDS etc)

KINEMATIC DIAGRAMS

FOR THE REPRESENTATION OF THE MECHANISM AS A SKELETON

SIMPLE LINK

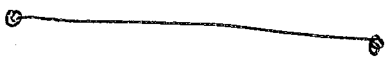

=

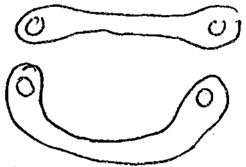

SIMPLE LINK + POINT OF INTEREST

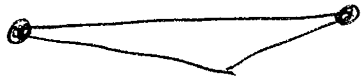

=

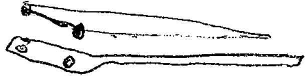

COMPLEX LINK

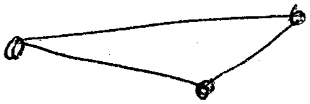

PIN JOINT

SLIDE JOINT

OR

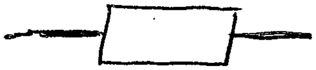

CAM JOINT

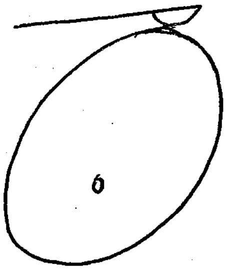

GEAR JOINT

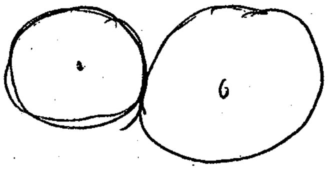

OR

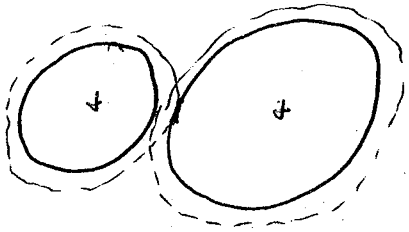

EXAMPLE PROBLEM 1.1

① FRAME (STATIC LINK)
② OTHER LINKS
③ JOINTS
④ POINTS OF INTEREST
⑤ DRAW OF KINEMATIC DIAGRAM

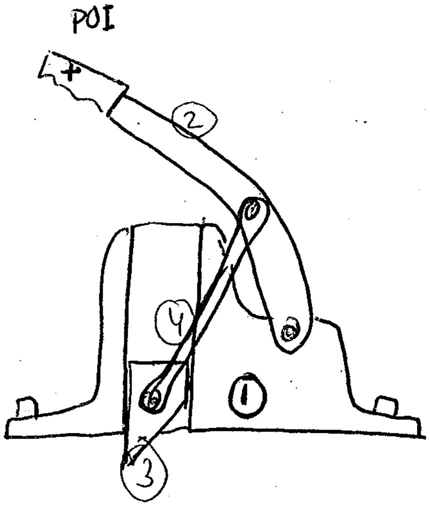

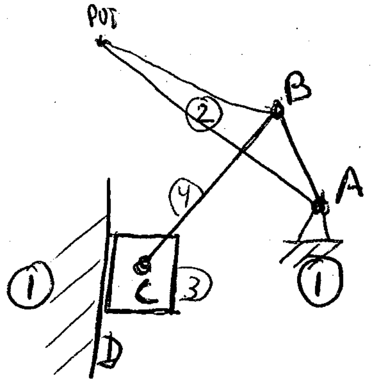

71B

1-4

KINEMATIC INVERSION

THE USE OF ALTERNATE LINKS TO SERVE AS THE FIXED LINK IS TERMED KINEMATIC INVERSION

MOBILITY

NUMBER OF DEGREES OF FREEDOM = DOF =

= NUMBER OF INDEPENDENT INPUTS REQUIRED DO POSITION ALL LINKS OF THE MECHANISM WITH RESPECT TO THE GROUND

= MOBILITY = F

GRUEBLER'S EQUATION

$$DOF = 3(n-1) - 2j_p - j_h$$

n = total number of links in the mechanism

j_p = " " " primary joints (pins or sliding joints)

j_h = " " " higher-order joints (cam or gear joints)

ASSUMPTIONS: 2D, FRAME = GROUND

DOF = 1 ⤳ "constrained Mechanism"

DOF ≤ 0 ⤳ "locked mechanisms" (structures)

* FOR 3D = KUTZBACH CRITERION

$$M = 6(m-j-1) + \sum_{i=1}^{j} f_i$$

1-5

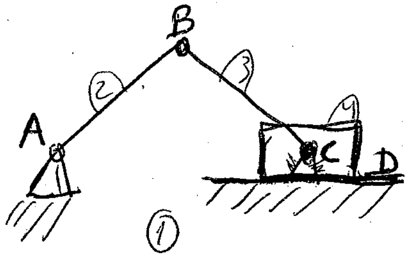

$m = 4$

$J_p = 4$

$J_h = 0$

$DOF = 3(4-1) - 2\cdot 4 - 2\cdot 0$

$DOF = 1$

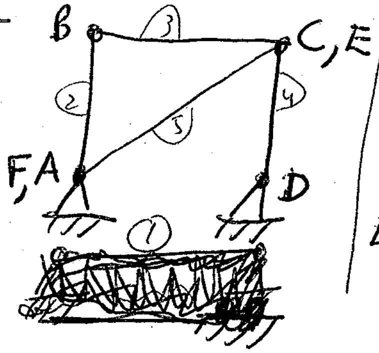

$m = 5$

$J_p = 4 + 2$

$J_h = 0$

$DOF = 3(5-1) - 2\cdot 6 - 2\cdot 0$

$DOF = 0$

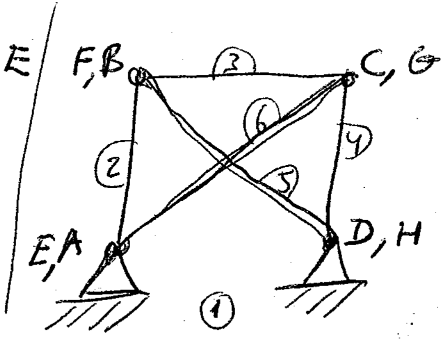

$m = 6$

$J_p = 4 + 2 + 2$

$J_h = 0$

$DOF = 3(6-1) - 2\cdot 8 - 2\cdot 0$

$DOF = -1$

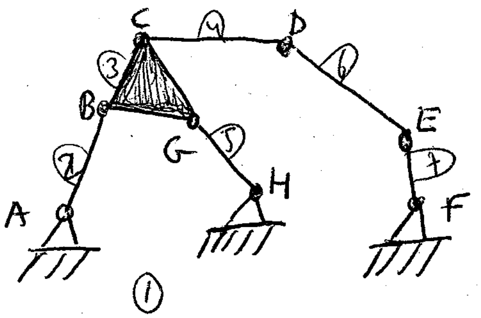

$m = 7$

$J_p = 8$

$J_h = 0$

$DOF = 3(7-1) - 2\cdot 8 - 2\cdot 0$

$DOF = 2$

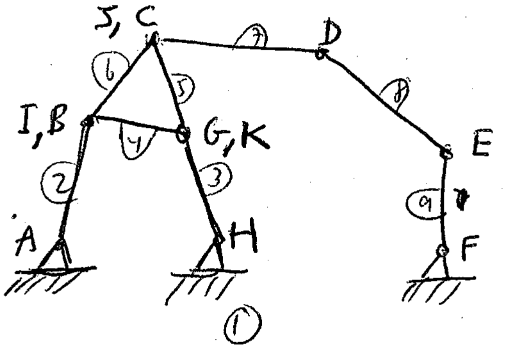

$m = 9$

$J_p = 11$

$J_h = 0$

$DOF = 3(9-1) - 2\cdot 11 - 2\cdot 0$

$DOF = 2$

EXAMPLE

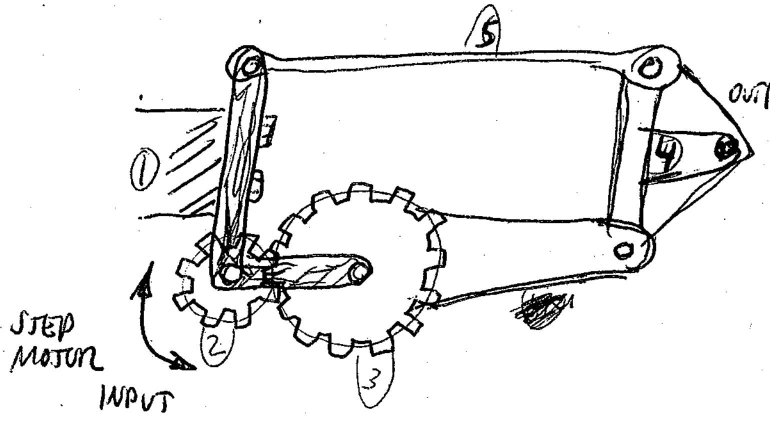

① IDENTIFY FRAME
② LINKS
③ JOINTS
④ POINTS OF INTEREST
⑤ KINEMATIC DIAGRAM
⑥ MOBILITY

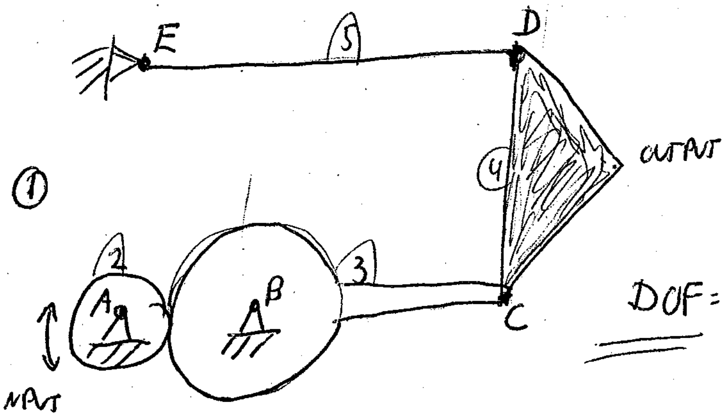

$m = 5$

$j_p = 5$

$j_h = 1$

$\underline{DOF} = 3(5-1) - 2\cdot 5 - 1 = \underline{\underline{1}}$

ACTUATORS AND DRIVERS

ROTATING ~~ROTATIONAL~~ ~~ROTATORY~~ ACTUATORS
- ELECTRIC MOTORS (AC, DC, SERVO MOTORS, STEPMOTORS)
- ENGINES
- AIR OR HYDRAULIC MOTORS — PARTIAL ROTATION OR FULL (AS MOTORS)
- MANUAL

LINEAR ACTUATORS
- SOLONOIDS
- CYLINDERS (HYDRAULIC, PNEUMATIC)
- ~~ELECTRIC~~
- SCREW ACTUATORS
- MANUAL

1-7

KINEMATIC MODEL OF SOME JOINTS

① ECCENTRIC CRANK

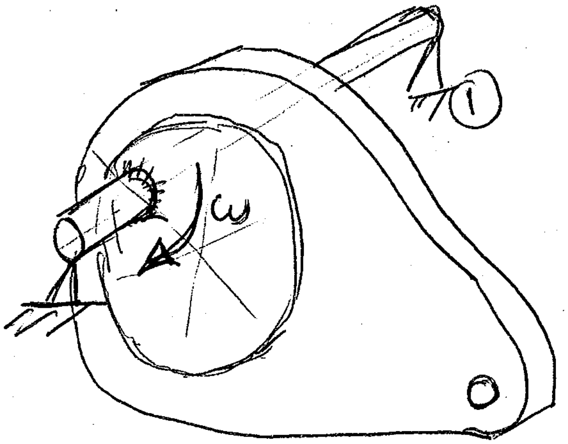

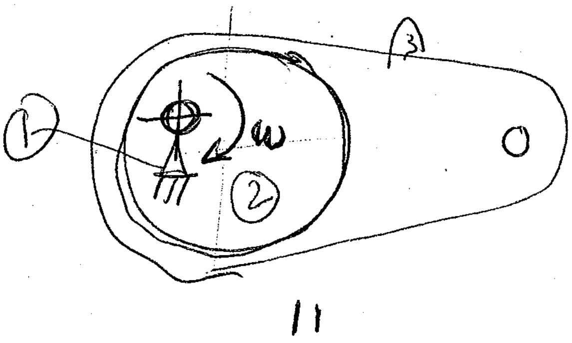

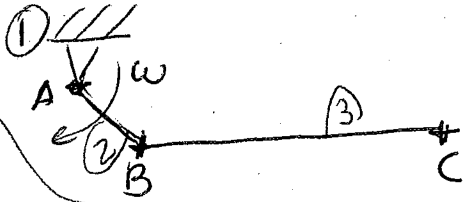

② SCREW JOINT

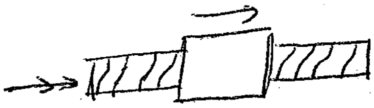

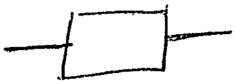

MODELED AS A SLIDER

③ PIN IN A SLOT JOINT

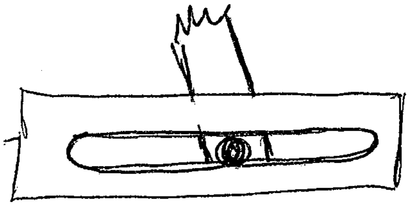

THE PIN PERMITS ROTATION + SLIDING SO: HIGH-ORDER JOINT

IN ORDER TO SIMPLIFY THE KINEMATIC ANALYSIS, THERE IS A NEED TO ADD A LINK AND CONVERT THE PIN INTO TWO SIMPLE JOINTS

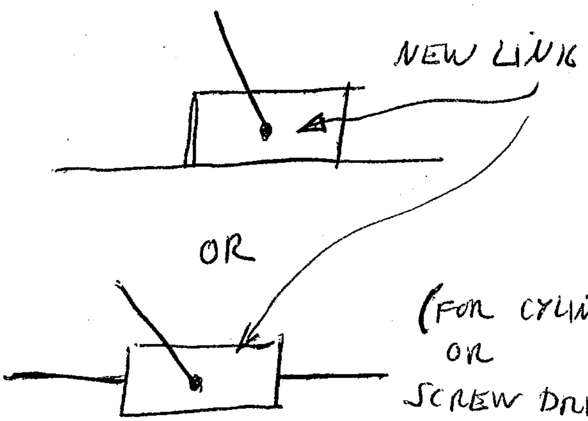

(FOR CYLINDERS OR SCREW DRIVERS)

EXAMPLE

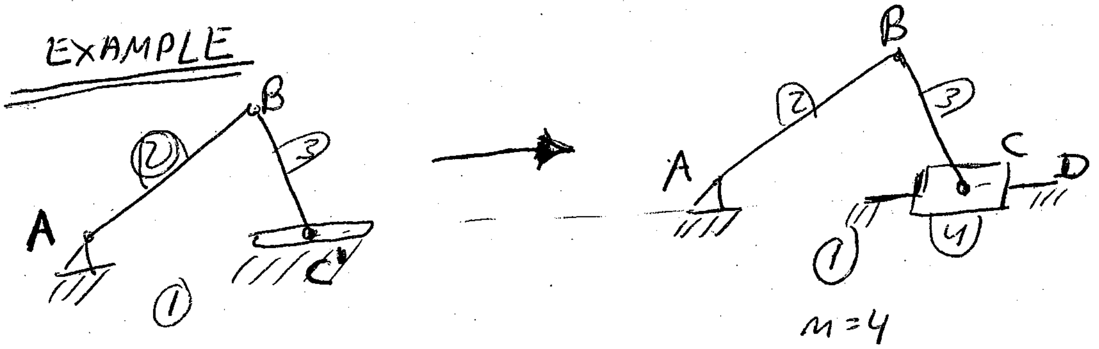

$m = 3$

$j_P = 2$

$j_H = 1$

$DOF = 3(3-1) - 2 \cdot 2 - 1 = 1$

$m = 4$

$j_P = 4$

$j_H = 0$

$DOF = 3(4-1) - 2 \cdot 4 - 0 = 1$

EXEPTIONS TO THE GRUEBLER EQUATION

① CASES IN WHICH A LINK OR MORE ARE REDUNDANT (IF YOU TAKE OUT THOSE LINKS - THE LINKAGE WILL BEHAVE KINEMATICLY EXACTLY THE SAME)

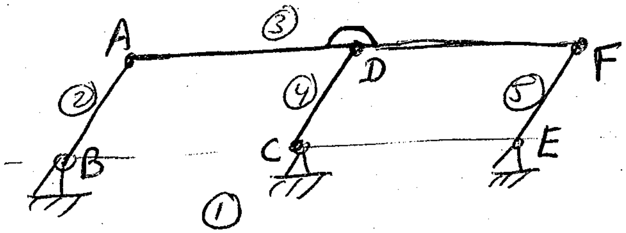

$m = 5$

$j_P = 6$

$j_H = 0$

$DOF = 3(5-1) - 2 \cdot 6 - 0 = 0$!!

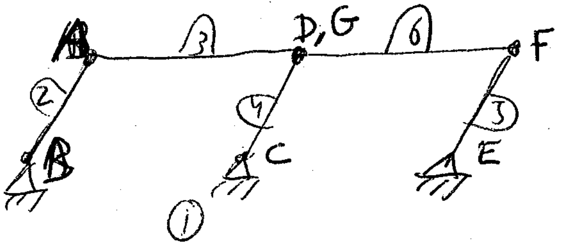

$m = 6$

$j_P = 7$

$j_H = 0$

$DOF = 3(6-1) - 2 \cdot 7 - 0 = 1$ ✓

②

1-9

② OVERCONSTRAINED AND UNDER CONSTRAINED LINKAGES COMBINED IN A MECHANISM

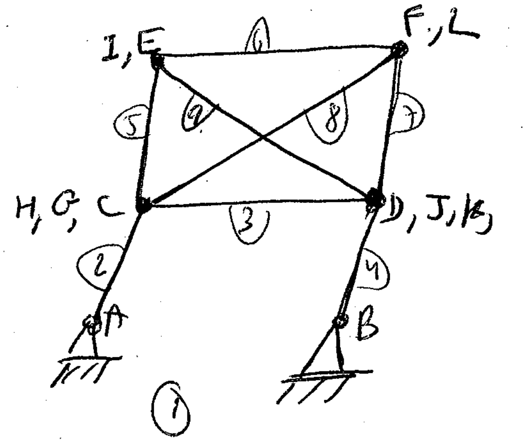

$m = 9$

$j_P = 12$

$j_H = 0$

$DOF = 3(9-1) - 2 \cdot 12 - 0 = 0$ NO!!

IDENTIFY OVER CONSTRAINED LINKAGES (CLOSED CHAINS), CONVERT THEM INTO ONE LINK WITH POINTS OF INTEREST:

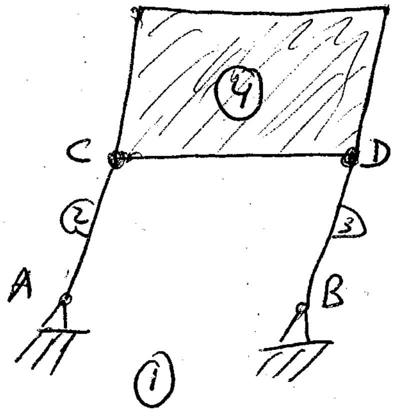

$m = 4$

$j_P = 4$

$j_H = 0$

$DOF = 3(4-1) - 2 \cdot 4 - 0 = 1$ ✓

LINKAGE = SMALLER CLOSED ~~LOOP~~ CHAIN MECHANISM

1-10

THE FOUR-BAR MECHANISM

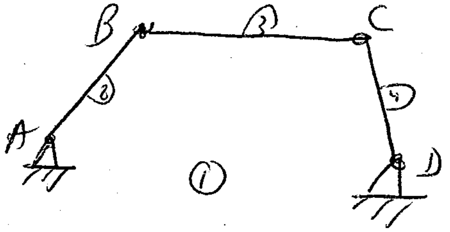

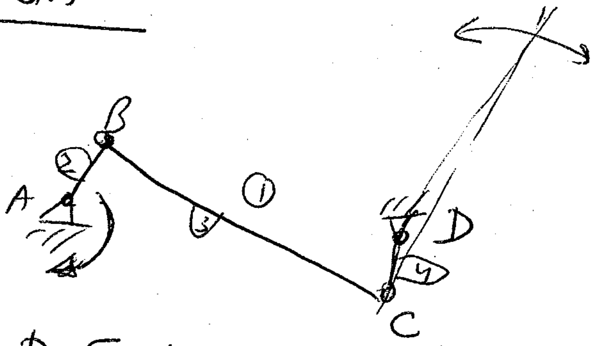

$m=4,\ j_P=4,\ j_H=0 \rightsquigarrow DOF=1$

INPUT LINK = FOLLOWER

COUPLER = CONNECTING ARM

OUTPUT LINK

GRASHOF's CRITERION

s = length of the shortest link
l = length of the largest link
p = " " one of the intermediate length links
q = " " the other " " "

a FOUR-BAR mechanism has at least one revolving link if

$$s+l \leq p+q$$ "GRASHOF TYPE 1"

CONVERSELY, THE THREE NON FIXED LINKS WILL ROCK IF: (LIMITED MOTION)

$$s+l > p+q$$ "GRASHOF TYPE 2"

1-11

5 DIFFERENT CATEGORIES / CASES:

CASE 1 - DOUBLE CRANK

GRASHOF TYPE 1 SHORTEST LINK = FRAME

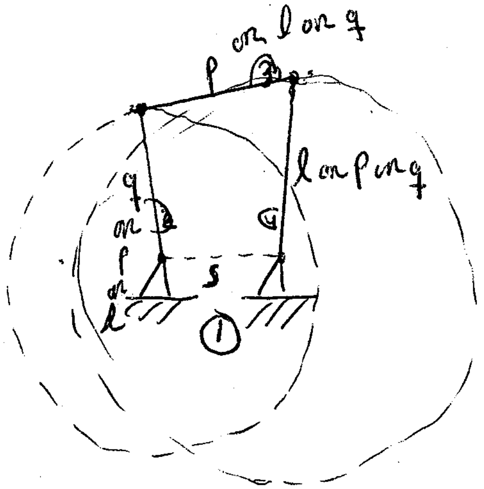

links 2 AND 4 ARE ABLE TO ROTATE TROUGH A FULL REVOLUTION

IT IS ALSO CALLED "DRAG LINK MECHANISM"

CASE 2 - CRANK-ROCKER

GRASHOF TYPE 1 , SHORTEST LINK = SIDE

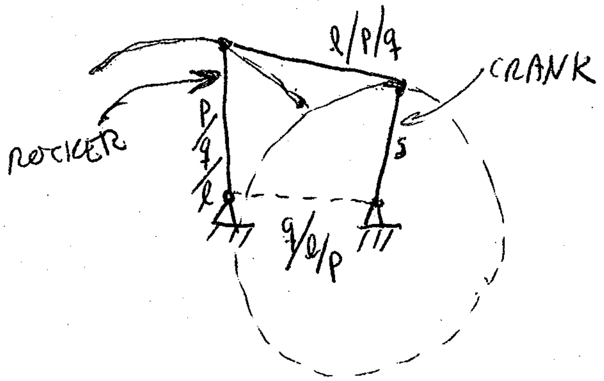

CASE 3 - DOUBLE ROCKER

GRASHOF TYPE 1, SHORTEST LINK = COUPLER

OR ROCKER-ROCKER

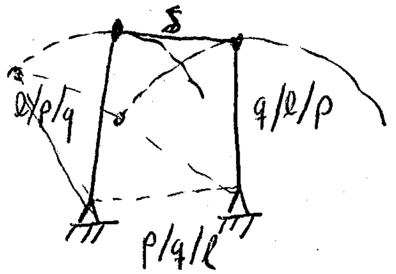

THE COUPLER IS ABLE TO COMPLETE A FULL REVOLUTION

CASE 4 - CHANGE POINT MECHANISM (SINGULARITY CONFIGURATION)

GRASHOF TYPE 1

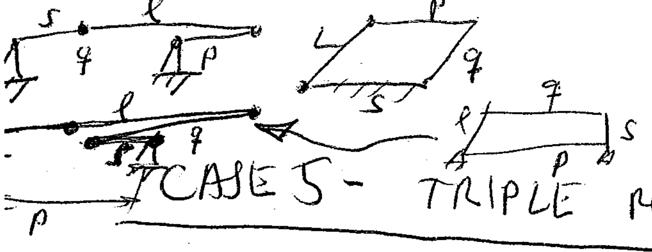

$s+l = p+q$, ANY LINK IS USED AS THE FRAME

~~IT DEPENDS~~ ~~p=s l=q ON BOOK~~

CASE 5 - TRIPLE ROCKER

GRASHOF TYPE 2

NONE OF THE LINKS ARE ABLE TO COMPLETE A FULL REVOLUTION

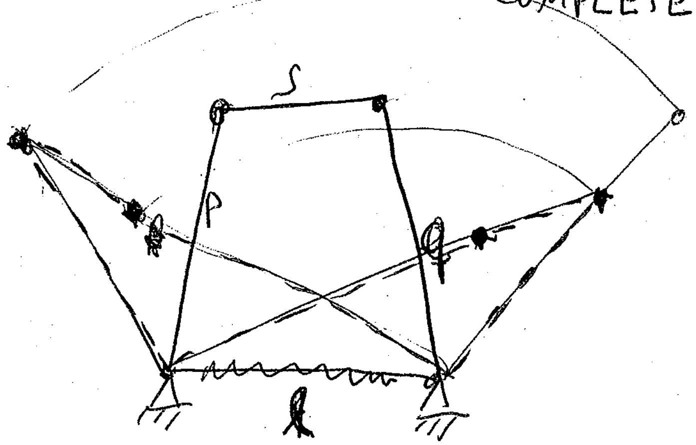

EXAMPLE

(NOT ALL THE DIMENSIONS OF THE MECHANISM ARE GIVEN IN THE DRAWING, BUT ARE KNOWN)

① DRAW KINEMATIC DIAGRAM

② CALCULATE DOF

③ IDENTIFY THE ~~A~~ FOUR-BAR LINKAGE (AS PART OF THIS MECHANISM)

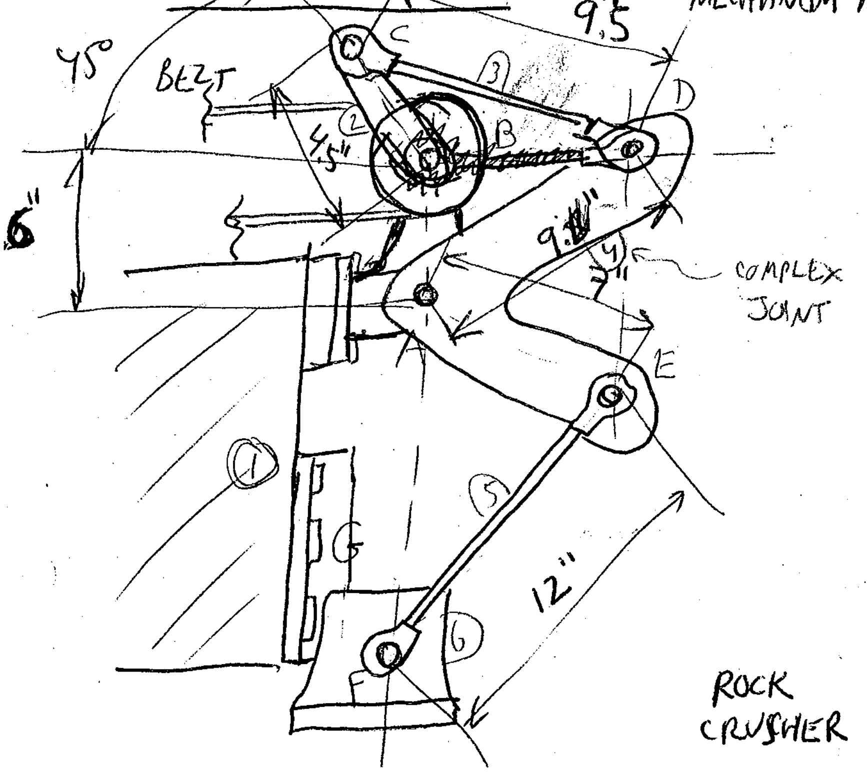

ROCK CRUSHER

1-12 A

PROVE OF GRASHOF INEQUALITY FOR CRANK-ROCKER

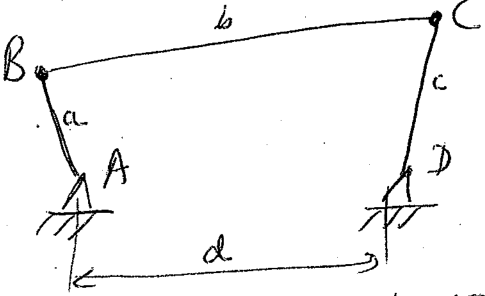

ASSUME $a < d$

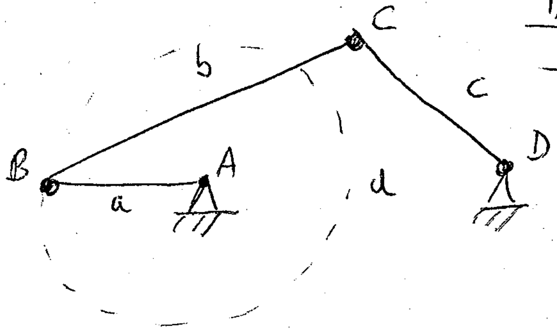

IN ORTHER AB TO BE A CRANK:

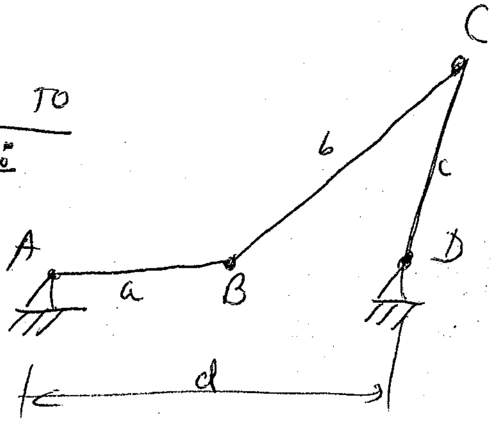

① $a+d < b+c$ STRONGER $\longrightarrow$ $d-a < b+c$

$b < \cancel{c+a}+d$ $\longleftarrow$ STRONGER $b < c+d-a$ ②

$c < \cancel{b+a}+d$ $\longleftarrow$ STRONGER $c < b+d-a$ ③

① $a+d \leqslant b+c$

② $b+a < c+d$

③ $c+a < b+d$

①+② $\rightsquigarrow$ $2a+\cancel{b}+\cancel{d} < \cancel{b}+2c+\cancel{d}$

①+③ $\rightsquigarrow$ $2a+\cancel{c}+\cancel{d} < 2b+\cancel{c}+\cancel{d}$

$a < c$

$a \leqslant b$

(FIRST ASSUME) $\rightarrow a < d$

a = SMALLER LINK

① $\rightsquigarrow a+d < b+c$ $\rightsquigarrow$ $s+l < p+q$

LOOKING FOR STRONGER

EXAMPLE - CONTINUE

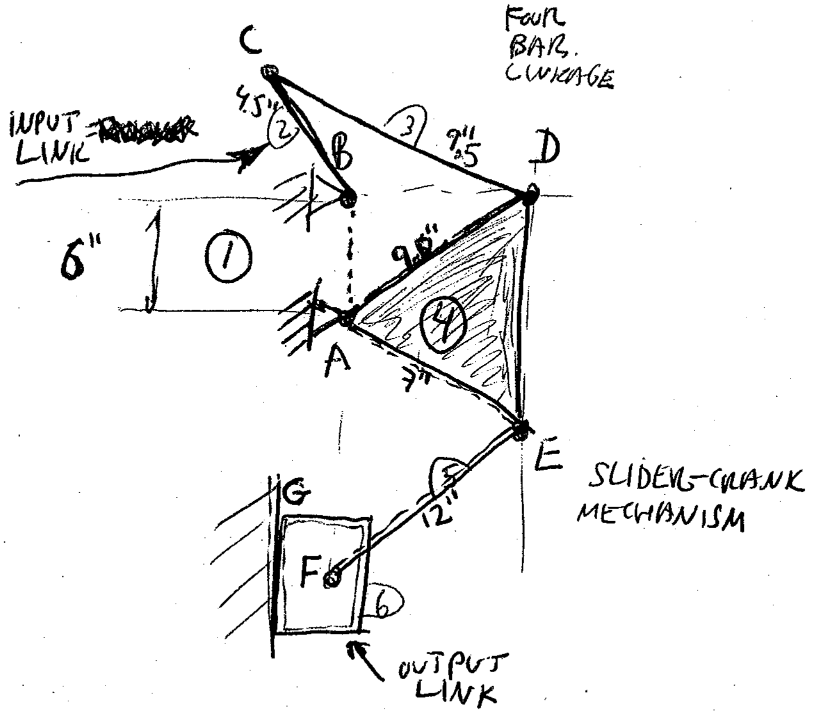

① KINEMATIC DIAGRAM
FRAME
OTHER LINKS
JOINTS
POINTS OF INTEREST

② $n = 6$
$j_P = 7$
$j_H = 0$

$DOF = 3(6-1) - 2 \cdot 7 - 0$
$DOF = 1$

CONSTRAINED MECHANISM

③ $s = 4.5"$ ← ~~COUPLER~~ SIDE
$l = 9.5"$
$p = 9"$
$q = 6"$

$s+l = 14 < p+q = 15$

GRASHOF TYPE 1

CRANK-ROCKER FOUR BAR LINKAGE

SLIDER-CRANK MECHANISM

A COMMON MECHANISM

CRANK THROUGH A FULL 360° ROTATION IF:

$b > a$

$b - a > c$

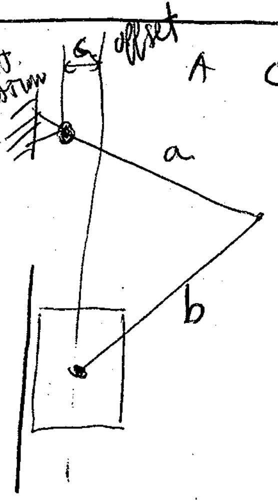

DOF = 1

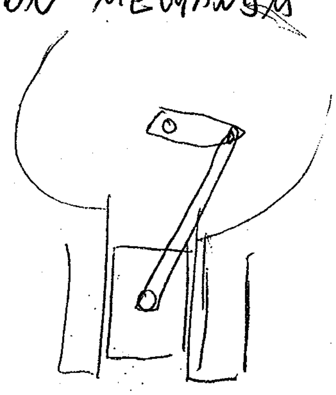

etc.

$n = 4$

$j_P =$ 3 pins + 1 slide

$j_H = 0$

DOF = 1

1-13A

(ONE) 1 DOF METHANISM

LET ASSUME $j_h = 0$

$$DOF = 1 = 3(n-1) - 2j_p$$

$$\boxed{j_p = \frac{3}{2}n - 2}$$

(EVEN)

((NOT ODD))

n	j_p	NUMBER OF POSSIBLE CONFIGURATIONS
2	1	1
4	4	1
6	7	2
8	10	16
10	13	230

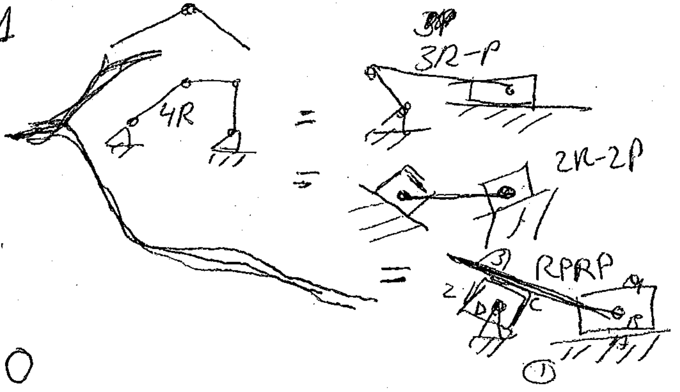

2 LINKS IN COMMON BETWEEN THE TWO LINKAGES

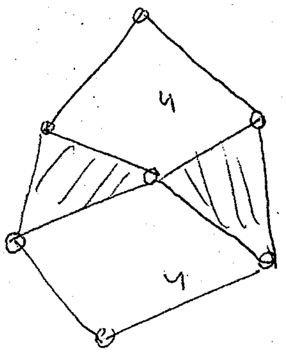

WATT CHAIN

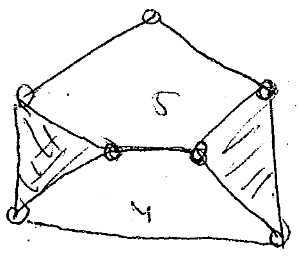

3 links in common between the two linkages

STEPHENSON CHAIN

STEPHENSON CHAIN

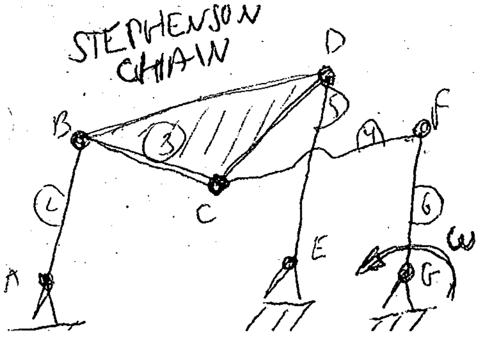

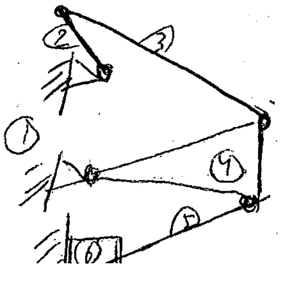

ONLY LINKS ① AND ④ ARE COMMON TO THE FOUR BAR LINKANGE AND THE SLIDER

1-14

HOME WORK

~~INPUT AND OUTPUT~~
~~IN GENERAL: ASSUME HANDLE AS A POINT OF INTEREST A PLIER, WORKING POINT (EDGE OF FORK,~~

2nd 3rd 3rd

1-1, 1-3, 1-5, 1-7, 1-10, ~~1-12~~, 1-16, 1-18, 1-22, 1-25
1-26, 1-28, 1-30, 1-32, 1-35, ~~1-37~~, 1-41, 1-43, 1-47, 1-50
1-52, 1-54 (THU JAN. 20)

ASSUME INPUT AND OUTPUT POINTS AS POINTS OF INTEREST: HANDLES, EDGE OF A **PLIER, FORK** ETC.

ABOUT CHAPTER 2 → "WORKING MODEL"

- * USE OF AUTO CAD 2D
- * USE OF MATLAB
- * USE OF EXCEL

VECTORS

=

ASSUME THAT STUDENTS HAVE KNOWLEDGE ON LINEAR ALGEBRA, GEOMETRY AND TRIGONOMETRY

REVIEW THE BEGINING OF CHAPTER 3 ON THE TEXTBOOK

SYMBOLS $\underline{A}$ OR $\vec{A}$ OR

VECTOR $\mathbf{A} = \underline{a} = \vec{a}$

THE BOOK ME

$R = A \rightarrow + B \rightarrow - C$

$\underline{r} = \underline{a} + \underline{b} - \underline{c}$

OR

$\underline{R} = \underline{A} + \underline{B} - \underline{C}$

$\underline{R} = R_x \hat{i} + R_y \hat{j} + R_z \hat{k}$

OR

$\underline{R} = R_x \hat{x} + R_y \hat{y} + R_z \hat{z}$

$\vec{r} = \vec{a} + \vec{b} - \vec{c}$

OR

$\vec{R} = \vec{A} + \vec{B} - \vec{C}$

POSITIVE MAGNITUDE

ANGLE OVER x

$R = 250 \angle 250^\circ$

→ = 0°
↑ = 90°
↓ = 270°

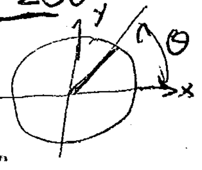

1-15

	TEXTBOOK	ME	OTHERS
ABSOLUTE POSITION	r_A	$\underline{r}_A$	$\vec{r}_A$
RELATIVE POSITION	$r_{A/B} = r_A -\!\!> r_B$	$\underline{r}_{AB} = \underline{r}_A - \underline{r}_B$	$\vec{r}_{A,B} = \vec{r}_A - \vec{r}_B$
ABSOLUTE VELOCITY	v_A	$\underline{v}_A$	$\vec{v}_A$
RELATIVE VELOCITY	$v_{B/C} = v_B -\!\!> v_C$	$\underline{v}_{BC} = \underline{v}_B - \underline{v}_C$	$\vec{v}_{B,C} = \vec{v}_B - \vec{v}_C$
ABSOLUTE ACCELERATION	a_D	$\underline{a}_D$	$\vec{a}_D$
RELATIVE ACCELERATION	$a_{E/F} = a_E -\!\!> a_F$	$\underline{a}_{EF} = \underline{a}_E - \underline{a}_F$	$\vec{a}_{E,F} = \vec{a}_E - \vec{a}_F$
ANGULAR VELOCITY OF LINK i	ω_i	$\underline{\omega}_i$	$\vec{\omega}_i$
ANGULAR ACCELERATION OF LINK i	α_i	$\underline{\alpha}_i$	$\vec{\alpha}_i$

ADDITION OF VECTORS

$$A +\!\!> B = C$$

$$\underline{a} + \underline{b} = \underline{c}$$

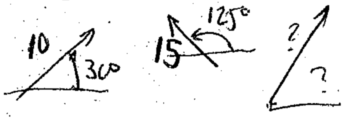

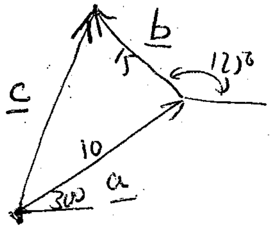

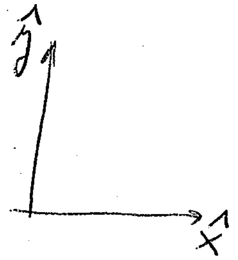

$$\underline{a} = 10\cos 30°\hat{x} + 10\sin 30°\hat{y} = 8.66\hat{x} + 5\hat{y}$$

$$\underline{b} = 15\cos 125°\hat{x} + 15\sin 125°\hat{y} = -8.6\hat{x} + 12.29\hat{y}$$

$$\underline{c} = \underline{a} + \underline{b} = (8.66 - 8.6)\hat{x} + (5 + 12.29)\hat{y} = 0.06\hat{x} + 17.29\hat{y}$$

$$\underline{c} = \sqrt{0.06^2 + 17.29^2}\ \underbrace{tg^{-1}\left(\frac{17.29}{0.06}\right)}_{tg^{-1}(s) = \alpha + k\pi} = 17.29 \angle \underline{89}.81°$$

1-16

SUBSTRACTION OF VECTORS

$\underline{a} - \underline{b} = \underline{d}$ (A->B=D)

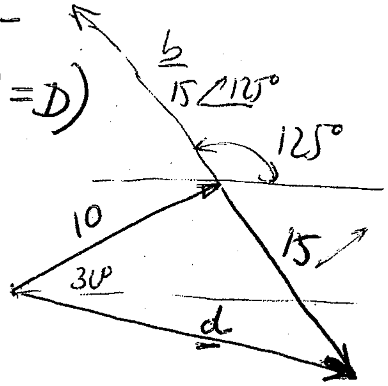

10∠30° 15∠125

$\underline{d} = (8.66 - (-8.6))\hat{x} + (5 - 12.29)\hat{y}$

$\underline{d} = 17.26\hat{x} - 7.29\hat{y} = \sqrt{17.26^2 + 7.29^2}\ tg^{-1}\left(\frac{-7.29}{17.25}\right)$

$\underline{d} = 18.7\angle -22.9° = 18.7\angle 337.1°$

DETERMINATION OF VECTOR MAGNITUDES

- FOR AN ADDITION OR A SUBSTRACTION, WE FIND A MAGNITUDE + A DIRECTION
- LET ASSUME THAT WE DONT KNOW 2 MAGNITUDES BUT WE KNOW THE DIRECTIONS OF THE VECTORS

$\underline{a} + \underline{b} + \underline{c} = \underline{d}$

$\underline{a} = 10\angle 60°$

$\underline{b} = 8\angle 30°$

$\underline{c} = c\angle -45°$

$\underline{d} = d\angle 15°$

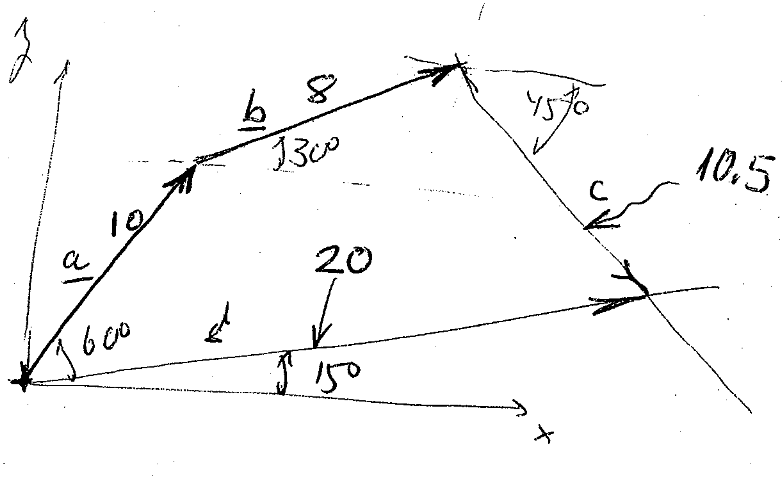

1-17

ANALYTICAL SOLUTION:

$$\underline{a} = 10\cos 60^\circ \hat{x} + 10\sin 60^\circ \hat{y}$$

$$\underline{b} = 8\cos 30^\circ \hat{x} + 8\sin 30^\circ \hat{y}$$

$$\underline{c} = c\cos(-45^\circ)\hat{x} + c\sin(-45^\circ)\hat{y}$$

$$\underline{d} = d\cos 15^\circ \hat{x} + d\sin 15 \hat{y}$$

$$(\underline{a}+\underline{b}+\underline{c})\cdot\hat{x} = \underline{d}\cdot\hat{x}$$

$$10\cos 60^\circ + \overset{8\cos 30^\circ}{\cancel{10\sin 60^\circ}} + c\cos(-45^\circ) = d\cos 15^\circ$$

$$(\underline{a}+\underline{b}+\underline{c})\cdot\hat{y} = \underline{d}\cdot\hat{y}$$

$$10\sin 60^\circ + 8\sin 30^\circ + c\sin(-45^\circ) = d\sin 15^\circ$$

$$\underline{c = 10.56}$$

$$\underline{d = 20.08}$$

$$\begin{bmatrix} -\cos(-45^\circ) & \cos 15^\circ \\ -\sin(-45^\circ) & \sin 15^\circ \end{bmatrix} \begin{bmatrix} c \\ d \end{bmatrix} = \begin{bmatrix} (10\cos 60^\circ + 8\cos 30^\circ) \\ (10\sin 60^\circ + 8\sin 30^\circ) \end{bmatrix}$$

$$\begin{bmatrix} c \\ d \end{bmatrix} = \begin{bmatrix} -\cos(-45^\circ) & \cos 15^\circ \\ -\sin(-45^\circ) & \sin 15^\circ \end{bmatrix}^{-1} \begin{bmatrix} (10\cos 60^\circ - +8\cos 30^\circ) \\ (10\sin 60^\circ + +8\sin 30^\circ) \end{bmatrix}$$

1-18

POSITION AND DISPLACEMENT ANALYSIS

POSITION

POSITION VECTOR R or $\underline{r}$

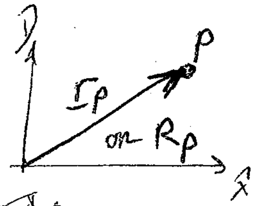

ANGULAR POSITION OF A LINK

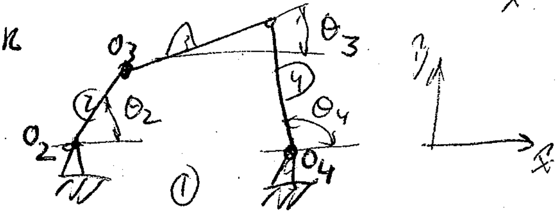

POSITION OF A MECHANISM

THE POSITION OF ALL POINTS $\overbrace{\quad}^{\text{OF INTEREST}}$ AND LINKS AS A FUNCTION OF THE ~~DR~~ IPUT/S LINK/S OR POINT/S

DISPLACEMENT

A VECTOR THAT REPRESENTS THE DISTANCE BETWEEN THE STARTING ~~POINT~~ AND ENDING POSITIONS OF A POINT OR LINK, LINEAR OR /AND ANGULAR DISPLACEMENT

⊛ LINEAR DISPLACEMENT OF POINT P TO P': $\Delta \underline{r}_P = \underline{r}_{P'P} = \underline{r}_{P'} - \underline{r}_P$

$\Delta R_P = R_{P'} \to R_P$

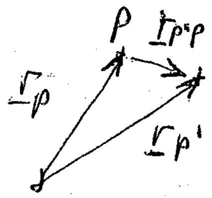

* ANGULAR DISPLACEMENT (ASSUMING $\underline{\theta}_i = \theta_i \hat{k} \to 2D$)

$\Delta\theta_2 = \theta_{2'} - \theta_2$

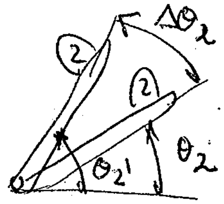

1-19 A

foot pump

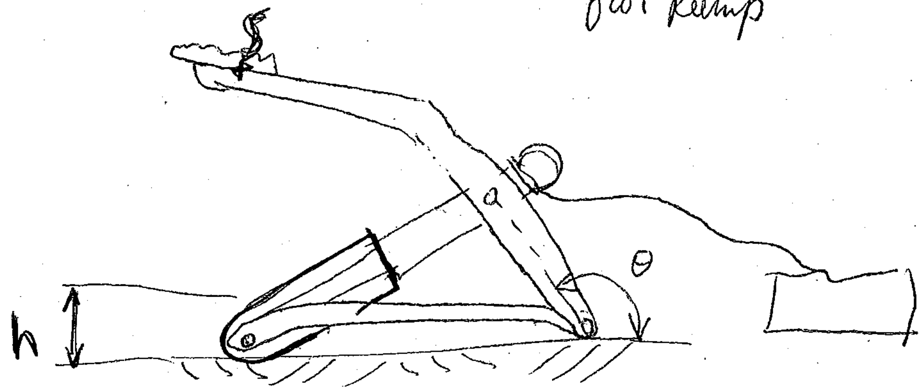

CYLINDER / PISTON DISPLACEMENT WHEN THE POINT S IS AT HIGH h

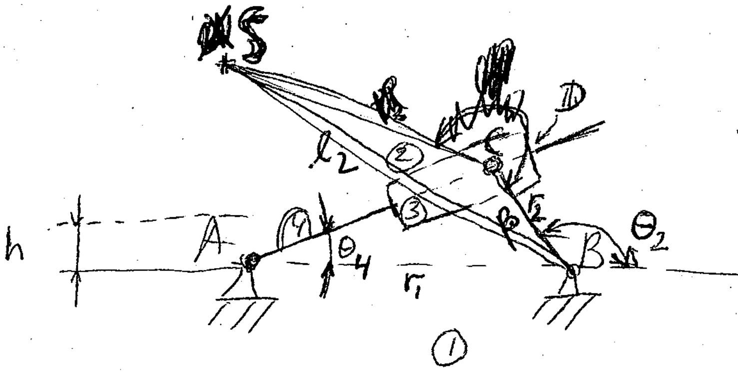

$$\left.\begin{matrix} n=4 \\ jp=4 \\ jh=0 \end{matrix}\right\} DOF=1$$

FROM UPPER POSITION TO LOWER: WHAT IS THE RELATIVE DISPLACEMENT Δx BETWEEN LINKS ③ AND ④ ?

GRAPHICAL ANALYSIS

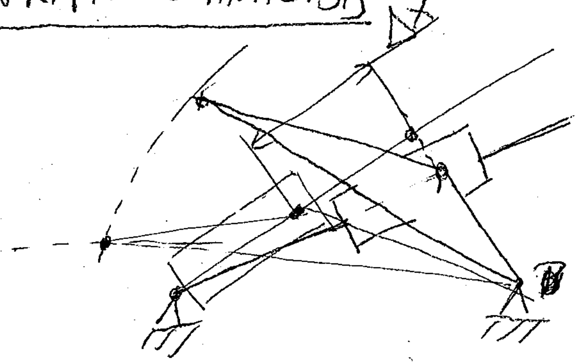

ANALYTICAL ANALYSIS

θ_2' - ANGLE θ_2 AFTER THE MOVEMENT

BE CAREFULL

$$\sin(\pi-(\beta+\theta_2')) = \frac{h}{\ell_2} = \sin(\beta+\theta_2')$$

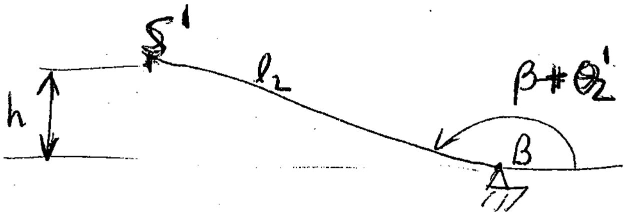

~~$\theta_2' = \pi - \beta - \sin^{-1}\left(\frac{h}{\ell_2}\right)$~~

$$\theta_2' = \sin^{-1}\left(\frac{h}{\ell_2}\right) - \beta \; \cancel{\theta_2}$$

$$\boxed{\theta_2' = \pi - \beta - \sin^{-1}\left(\frac{h}{\ell}\right)}$$

1-19 B

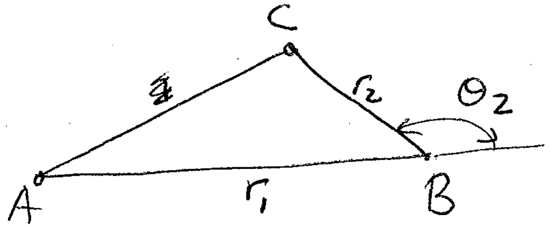

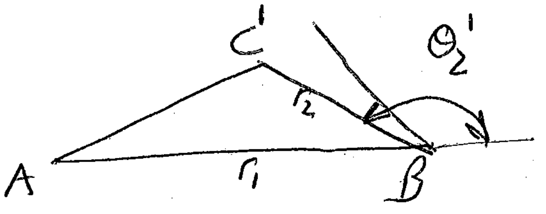

$\Delta x = \overline{AC} - \overline{AC'}$

$= -\cos\theta_2$

Law of cosines:

$(\overline{AC})^2 = r_1^2 + r_2^2 - 2 r_1 r_2 \cos(\pi - \theta_2)$

$(\overline{AC'})^2 = r_1^2 + r_2^2 - 2 r_1 r_2 \cos(\pi - \theta_2')$

$\pi - \theta_2' = \beta + \sin^{-1}\left(\frac{h}{l_2}\right)$

$$\boxed{\Delta x = \sqrt{r_1^2 + r_2^2 + 2 r_1 r_2 \cos(\theta_2)} - \sqrt{r_1^2 + r_2^2 - 2 r_1 r_2 \cos\left(\beta + \sin^{-1}\frac{h}{l_2}\right)}}$$

OR

$\underline{r}_{S'A} \cdot \hat{y} = h$

$\underline{r}_{S'A} = \underline{r}_{AB} + \underline{r}_{S'B} = (r_1 + l_2\cos(\beta + \theta_2'))\hat{x} + l_2\sin(\beta+\theta_2')\hat{y} \cdot \hat{y} = l_2 \sin(\beta + \theta_2') =$

$\sin(\beta + \theta_2') = \frac{h}{l_2}$

$\theta_2' = \begin{cases} \sin^{-1}\left(\frac{h}{l_2}\right) - \beta + 2\pi K \\ \pi \cancel{+} \beta - \sin^{-1}\left(\frac{h}{l_2}\right) + 2\pi K \end{cases}$

$\Delta x = |\underline{r}_{AC}| - |\underline{r}_{AC'}|$

$\underline{r}_{AC} = \underline{r}_{AB} + \underline{r}_{BC} = (r_1 + r_2\cos\theta_2)\hat{x} + r_2 \sin\theta_2 \hat{y}$

$\underline{r}_{AC'} = \underline{r}_{AB} + \underline{r}_{BC'} = (r_1 + r_2\cos\theta_2')\hat{x} + r_2\sin\theta_2' \hat{y}$

$\Delta x = \sqrt{(r_1 + r_2\cos\theta_2)^2 + (r_2\sin\theta_2)^2} - \sqrt{(r_1 + r_2\cos\theta_2')^2 + (r_2\sin\theta_2')^2}$

$$\boxed{\Delta x = \sqrt{r_1^2 + 2r_1 r_2\cos\theta_2 + r_2^2} - \sqrt{r_1^2 + 2 r_1 r_2 \cos\theta_2' + r_2^2}}$$

DISPLACEMENT ANALYSIS

CALCULATE DOF = THE NUMBER OF INPUTS NEEDED TO MOVE THE MECHANISM

GRAPHICAL ANALYSIS

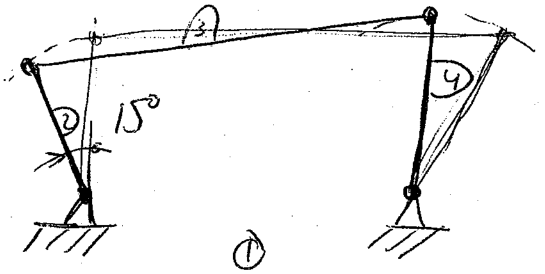

- DIMENSIONS GIVEN
- THE FIRST POSITION IS GIVEN
- DOF=1
- THE INPUT FROM LINK 2
- MOVE LINK 2 15° CLOCKWISE
- DRAW THE NEW POSITION OF THE FOUR-BAR LINKAGE

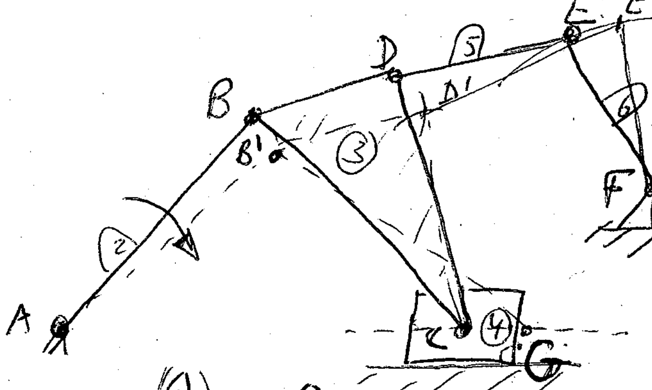

STEPHENSON CHAIN, DOF=1

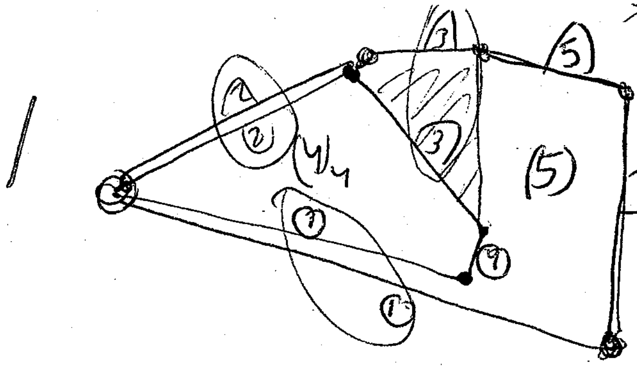

OR

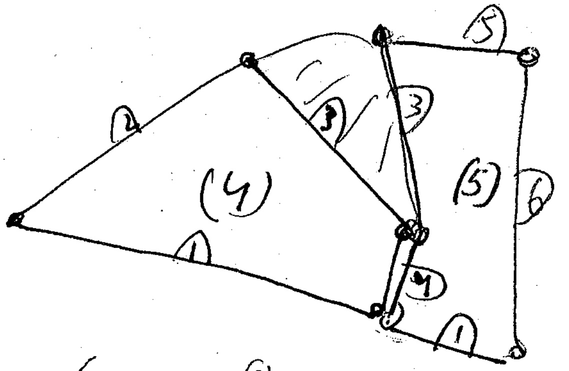

COMMON ①,②,③

COMMON ③,④,①

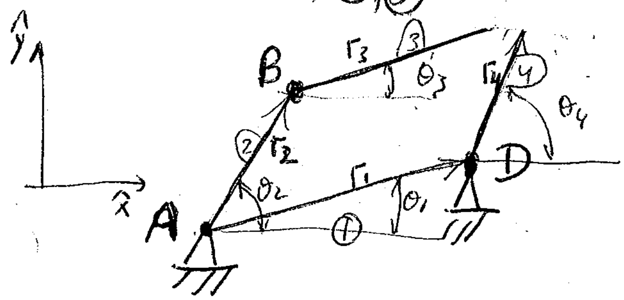

$\underline{r}_2 = \underline{r}_{BA} = r_2$

$\underline{r}_3 = \underline{r}_{CB} = r_3\left(\cos\theta_3\hat{x} + \sin\theta_3\hat{y}\right)$

$\underline{r}_4 = \underline{r}_{CD} = r_4\left(\cos\theta_4\hat{x} + \sin\theta_4\hat{y}\right)$

CLOSURE EQUATION: $\underline{r}_2 + \underline{r}_3 = \underline{r}_1 + \underline{r}_4$

1-20

(1) $r_2\cos\theta_2+r_3\cos\theta_3=r_1\cos\theta_1+r_4\cos\theta_4$

(2) $r_2\sin\theta_2+r_3\sin\theta_3=r_1\sin\theta_1+r_4\sin\theta_4$

θ_1 = GIVEN BY GEOMETRY (POSITION OF FRAME)

LET ASSUME LINK 2 IS THE DRIVER, SO θ_2 IS KNOWN

TWO EQUATIONS, TWO UNKNOWNS (θ_3, θ_4)

$$
\begin{array}{ll}
(1) & (r_3\cos\theta_3)^2=(r_1\cos\theta_1+r_4\cos\theta_4-r_2\cos\theta_2)^2 \\
 & \quad + \qquad\qquad\qquad\qquad + \\
(2) & (r_3\sin\theta_3)^2=(r_1\sin\theta_1+r_4\sin\theta_4-r_2\sin\theta_2)^2 \\
\hline
\end{array}
$$

$$
\begin{aligned}
r_3^2=r_1^2+r_2^2+r_4^2&+2r_1r_4(\cos\theta_1\boxed{\cos\theta_4}+\sin\theta_1\boxed{\sin\theta_4}) \\
&-2r_1r_2(\cos\theta_1\cos\theta_2+\sin\theta_1\sin\theta_2)+ \\
&+2r_2r_4(\cos\theta_2\boxed{\cos\theta_4}+\sin\theta_2\boxed{\sin\theta_4})
\end{aligned}
$$

~~$A=2r_1r_4\cos\theta_1-2$~~

KNOWNS

$$
\left.\begin{aligned}
A&=2r_1r_4\cos\theta_1-2r_2r_4\cos\theta_2 \\
B&=2r_1r_4\sin\theta_1-2r_2r_4\sin\theta_2 \\
C&=r_1^2+r_2^2+r_4^2-r_3^2-2r_1r_2\underbrace{(\cos\theta_1\cos\theta_2+\sin\theta_1\sin\theta_2)}_{\overset{\shortparallel}{(\cos(\theta_1-\theta_2))}}
\end{aligned}\right\} A\cos\theta_4+B\sin\theta_4+C=0
$$

$$\sin\theta_4=\frac{2\tan\left(\frac{\theta_4}{2}\right)}{1+\tan^2\left(\frac{\theta_4}{2}\right)}$$

$$\cos\theta_4=\frac{1-\tan^2\left(\frac{\theta_4}{2}\right)}{1+\tan^2\left(\frac{\theta_4}{2}\right)}$$

$$(C-A)t^2+2Bt+(A+C)=0 \quad \text{where } t=\tan\left(\frac{\theta_4}{2}\right)$$

1-21

$$t = \frac{-B \pm \sqrt{B^2 - C^2 + A^2}}{C-A} = \tan\frac{\theta_4}{2}$$

$$-\pi \leq \theta_4 \leq \pi$$

* IF $B^2-C^2+A^2<0$ ⇝ THE LINKAGE CAN NOT BE ASSEMBLED IN THE SPECIFIED POSITION

* TWO SOLUTIONS ARE AVAILABLE

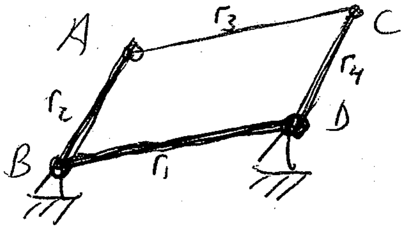

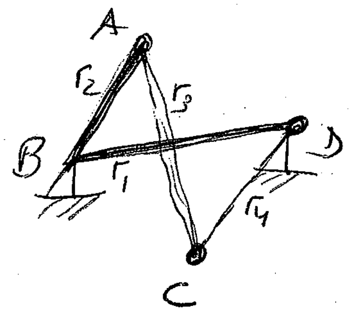

$$\left.\begin{aligned} \cos\theta_3 &= \text{CALCULATE FROM (1)} \\ \sin\theta_3 &= \text{CALCULATE FROM (2)} \end{aligned}\right\} \quad \mathrm{tg}\,\theta_3 = \frac{\sin\theta_3}{\cos\theta_3}$$

$$\theta_3 = \mathrm{tg}^{-1}\left(\frac{\sin\theta_3}{\cos\theta_3}\right) = \mathrm{ATAN2}(\sin\theta_3, \cos\theta_3)$$

AFTER THE DISPLACEMENTS ARE KNOWN, POINTS OF INTEREST MAY BE CALCULATED

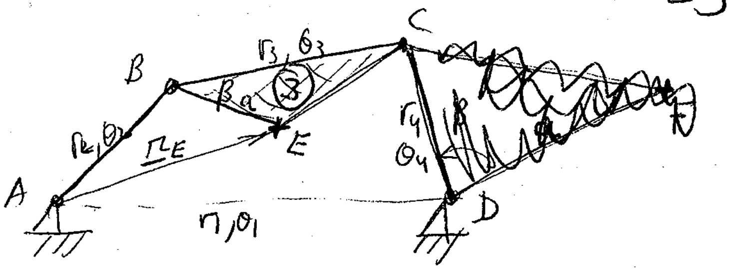

$$\underline{r}_E = \underline{r}_{BA} + \underline{r}_{EB} = \underline{r}_2 + a\left\{\cos(\theta_3-\beta)\hat{x} + \sin(\theta_3-\beta)\hat{y}\right\}$$

$$\underline{r}_E = \left(r_2\cos\theta_2 + a\cos(\theta_3-\beta)\right)\hat{x} + \left(r_2\sin\theta_2 + a\sin(\theta_3-\beta)\right)\hat{y}$$

SOLUTION TO HM#1 → ON THE WEB

QUIZ #1 2/10/05 ⇝ HM#1, HM#2 (UP TO "POSITION")

① KINEMATIC DIAGRAMS
② DOF
③ 4 BAR LINK.
④ DISPLACEMENT/POSITION

THIS THURSDAY – ?

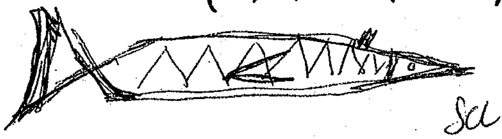

NO CLASS TODAY

SOLUTION ON FRIDAY, 2/4/05

PROBLEM:

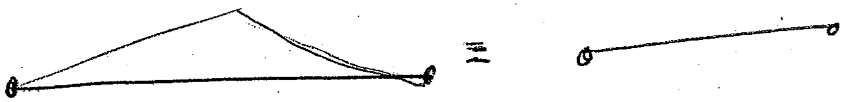

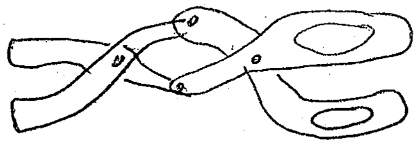

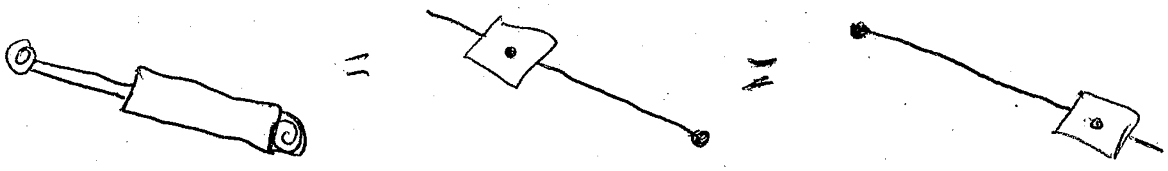

1-22

LIMITING POSITIONS

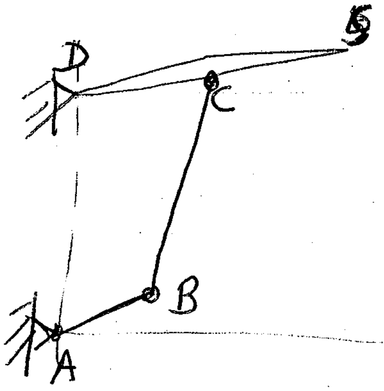

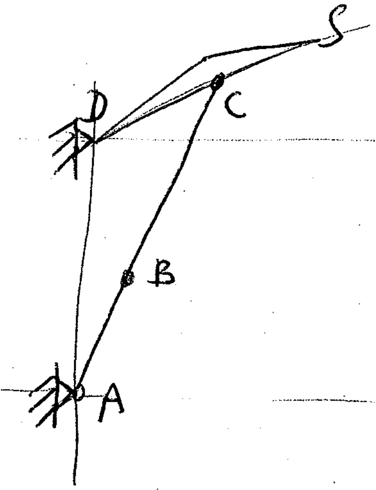

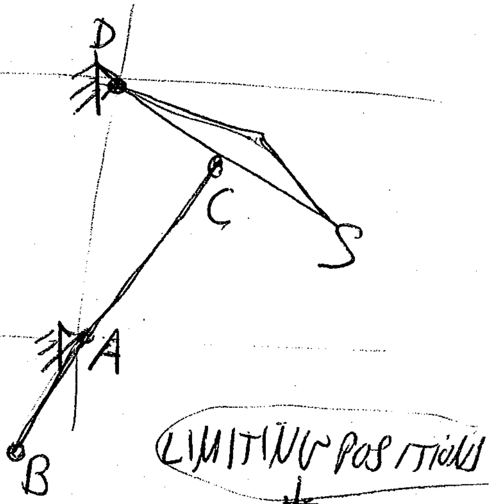

LIMITING POSITIONS
↓
COMPLETE CYCLE
↓
DISPLACEMENT DIAGRAM

COMPLETE CYCLE

THE TRACE OF DIFFERENT POINT THROUGH THE LIMITING POSITIONS

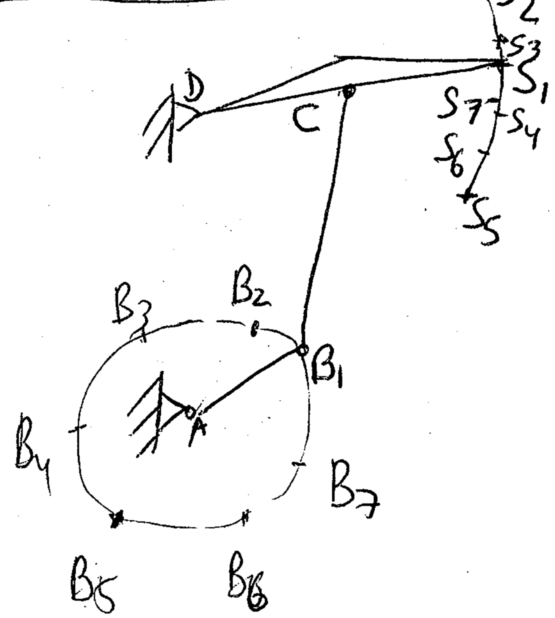

DISPLACEMENT DIAGRAM

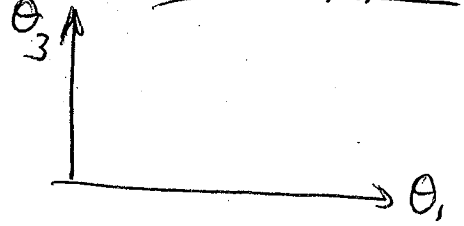

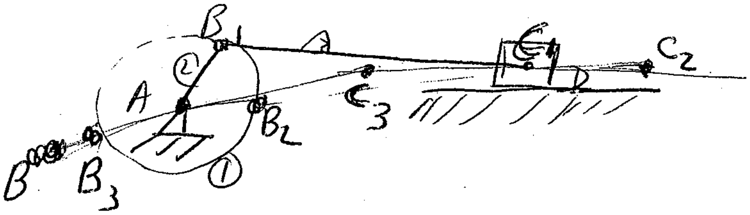

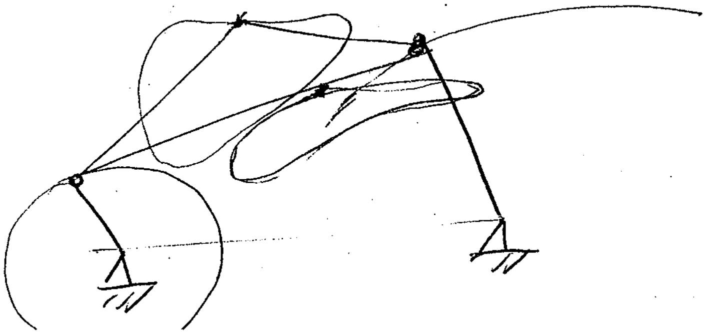

1-23

HOMEWORK

(2nd Ed.)	3rd Ed
(4-49)	4-22
(4-53)	4-24
(WEB)	4-36
(4-39)	4-55
(4-66)	4-70
(4-7)	4-76

① KINEMATIC DIAGRAM

② DOF

③ ANSWER

~~to~~ BE SUBMITED ON ~~TUESDAY~~ THURSDAY, FEB. 10

5-1

MECHANISM DESIGN #1

① TIME RATIO

A MECHANISM IN WICH THE INPUT IS A CRANK
IS GIVEN
FOR A CONSTANT ANGULAR VELOCITY OF THE CRANK
THE OUTPUT MAY HAVE DIFFERENT TIMES TO
MAKE A FULL STROKE

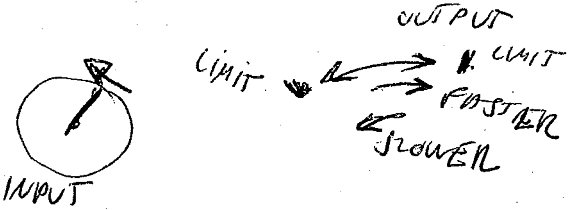

" QUICK RETURN MECHANISM.

TIME RATIO $Q = \frac{\text{TIME OF SLOWER STROKE}}{\text{TIME OF QUICKER STROKE}}$

SLIDER-CRANK MECHANISM WITH OFFSET

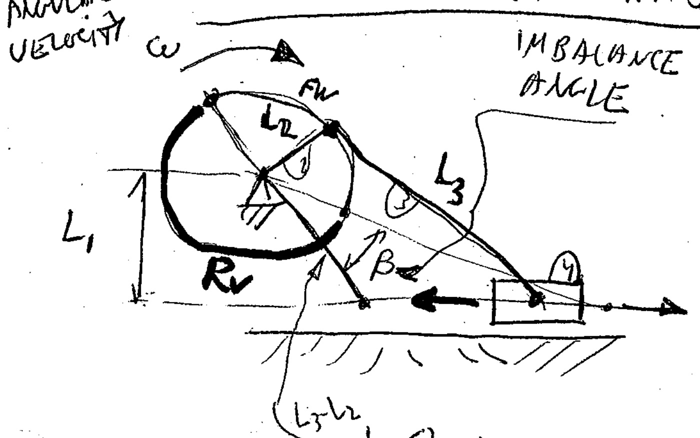

$L_1 < L_3 - L_2$

WHEN $L_1 = 0 \rightsquigarrow \beta = 0$

IF $\omega = \text{constant} \left[\frac{rad}{s}\right]$

$$Q = \frac{\pi+\beta}{\pi-\beta}$$

$$t_{FW} = \frac{\pi-\beta}{\omega}$$

$$t_{RV} = \frac{\pi+\beta}{\omega}$$

$$\beta = 180°\frac{(Q-1)}{(Q+1)}$$

$$t_{total} = t_{FW} + t_{RV} = \frac{2\pi}{\omega}$$

5-2

DESIGN OF A SLIDER-CRANK MECH. WITH OFFSET

STROKE $= \Delta R_4 = 5$

$\alpha \to \beta$ IS GIVEN $= \frac{\pi}{6}$

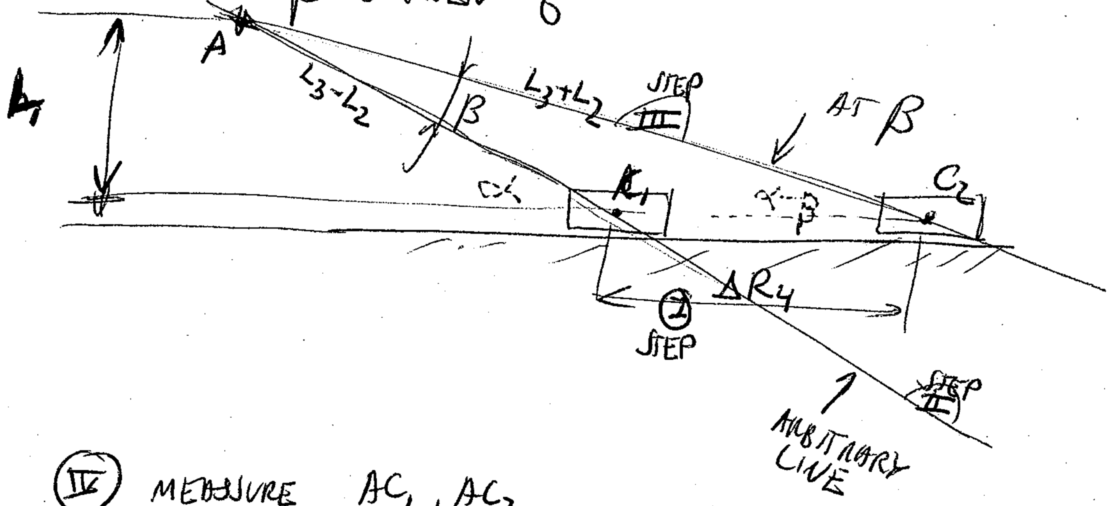

Ⅳ MEASURE AC_1, AC_2

$$\left.\begin{array}{l} L_3-L_2 = AC_1 \\ L_3+L_2 = AC_2 \end{array}\right\} L_3 = \frac{AC_1+AC_2}{2}$$

$$L_2 = AC_2 - L_3$$

ANALYTICAL:

$$(L_3-L_2)\sin\alpha = (L_3+L_2)\sin(\alpha-\beta)$$

$$(L_3+L_2)\cos(\alpha-\beta) - (L_3-L_2)\cos\alpha = \Delta R_4$$

$\vdots$

$L_2 =$

$L_3 =$

$L_1 = (L_3-L_2)\sin\alpha$

WHAT SHOULD WE DO FOR A REQUIRED L_1
INSTEAD OF GUESSING AN ARBITRARY α - ?

5-3

DESIGN OF CRANK-ROCKER MECHANISM

GRASHOF TYPE 1, shortest on the side

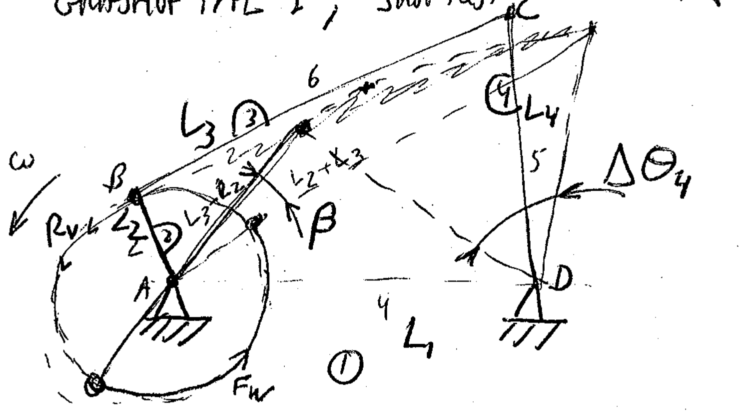

GIVEN $\Delta\theta_4$, β :

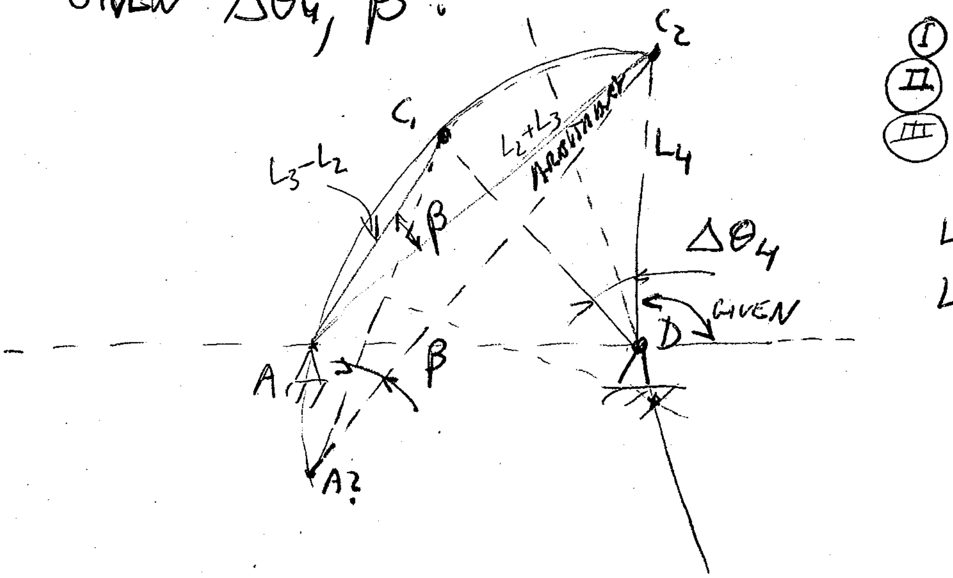

$$L_2 = \frac{AC_1 + AC_2}{2}$$

$$L_3 = AC_1 + L_2$$

CHECK μ

Good μ: 45°-135°

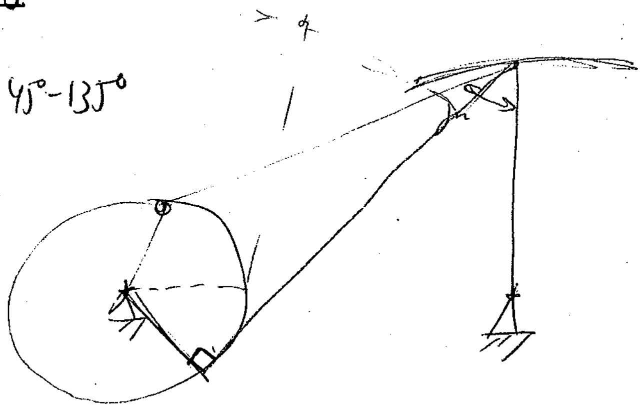

QUICK RETURN MECHANISM
EXAMPLE OF A CRANK – ROCKER MECHANISM DESIGN

1. A general 4 bar mechanism and its common parameters are shown:

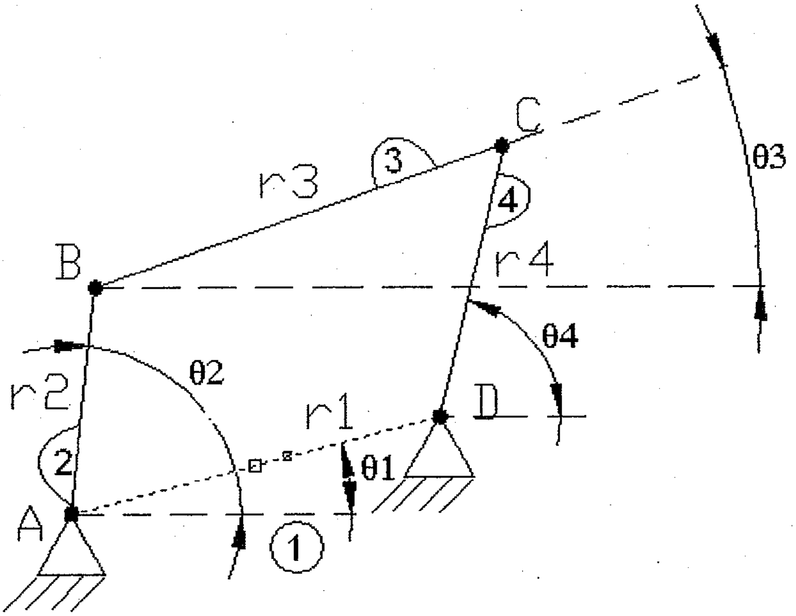

2. Design a "Quick Return" mechanism based on a crank – rocker 4 bar linkage, in which:
   a. Time ratio Q=2 (the slower stroke is twice the quicker stroke; $\beta=\pi/3$ rad=60°)
   b. r4=150mm
   c. $\theta 4=\pi/4$ rad=45°
   d. $\Delta\theta 4=\pi/6$ rad=30°

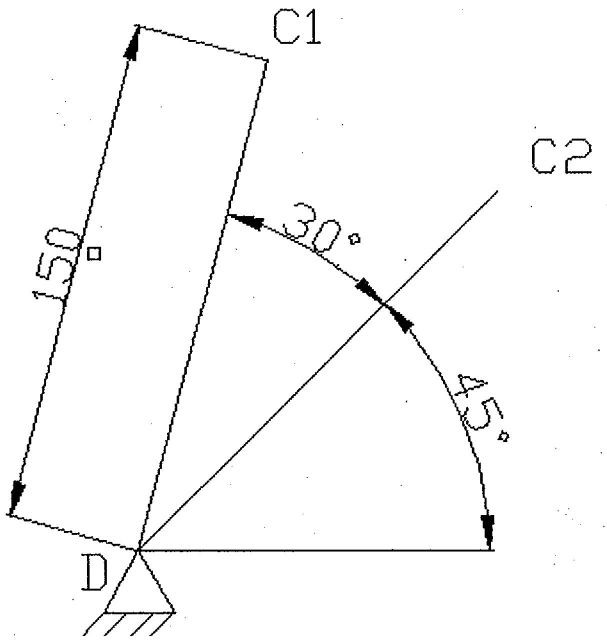

3. GRAPHICAL SOLUTION:

4. Draw an arbitrary line from C2 (or C1) and complete a line to C1 (or C2) by enforcing an angle β between them:

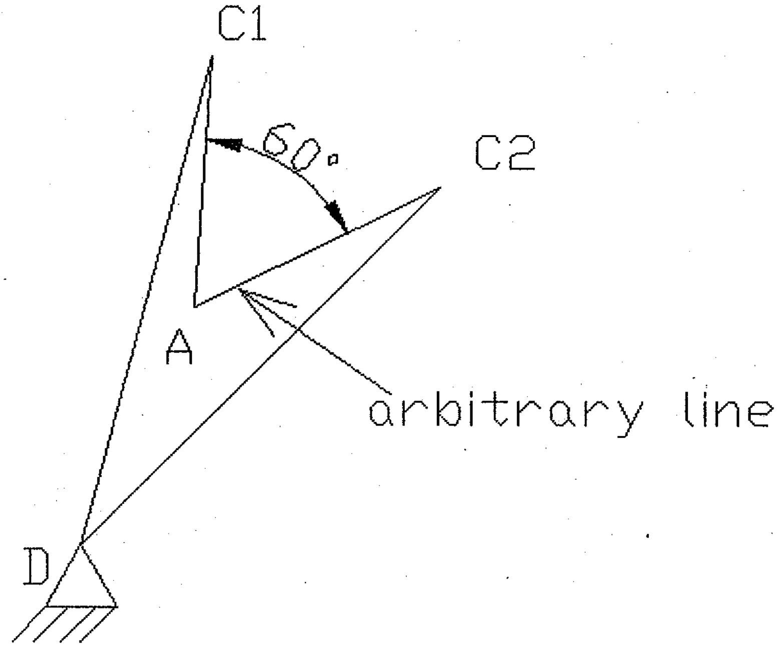

5. Draw a circle through A, C1, C2; point A may be moved along the circle to a desired position (there will be no changes on β magnitude)

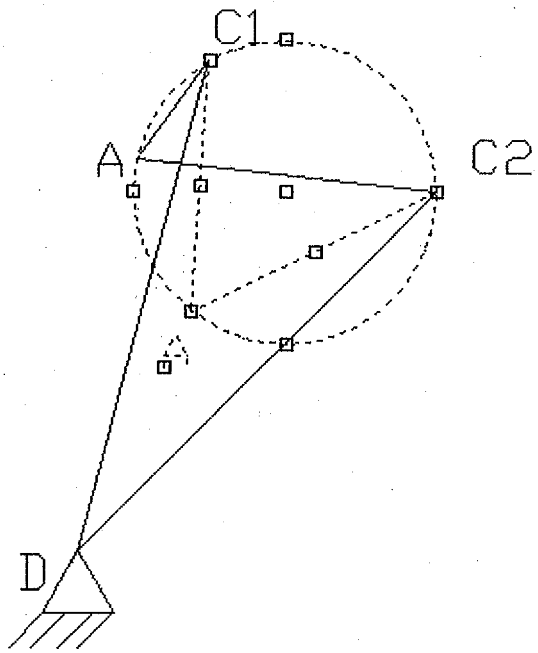

6. Measure $\overline{AC_1}$ and $\overline{AC_2}$.

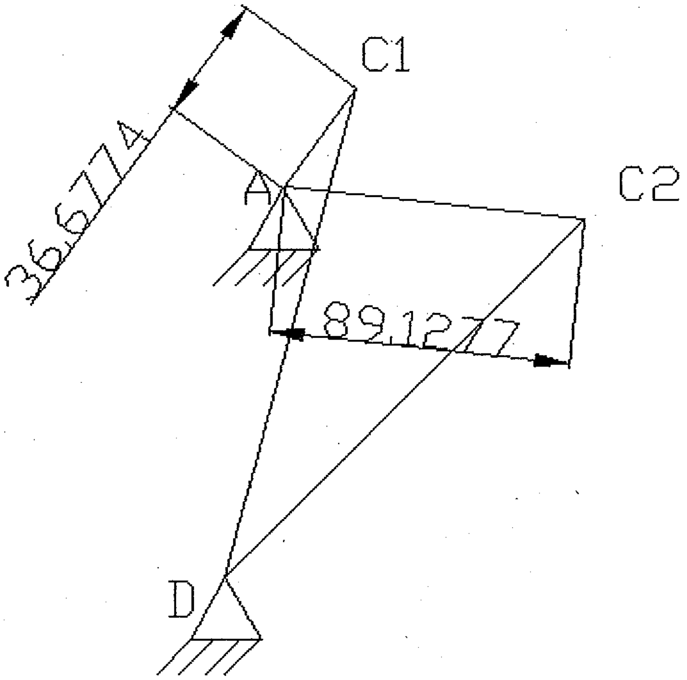

7. $\overline{AC_1}$ =r3-r2; $\overline{AC_2}$ =r3+r2, so:
   r3=($\overline{AC_1}$ + $\overline{AC_2}$)/2 and r2=($\overline{AC_2}$ - $\overline{AC_1}$)/2
   r3= 62.90255mm; r2= 26.22515mm

8. Draw the mechanism

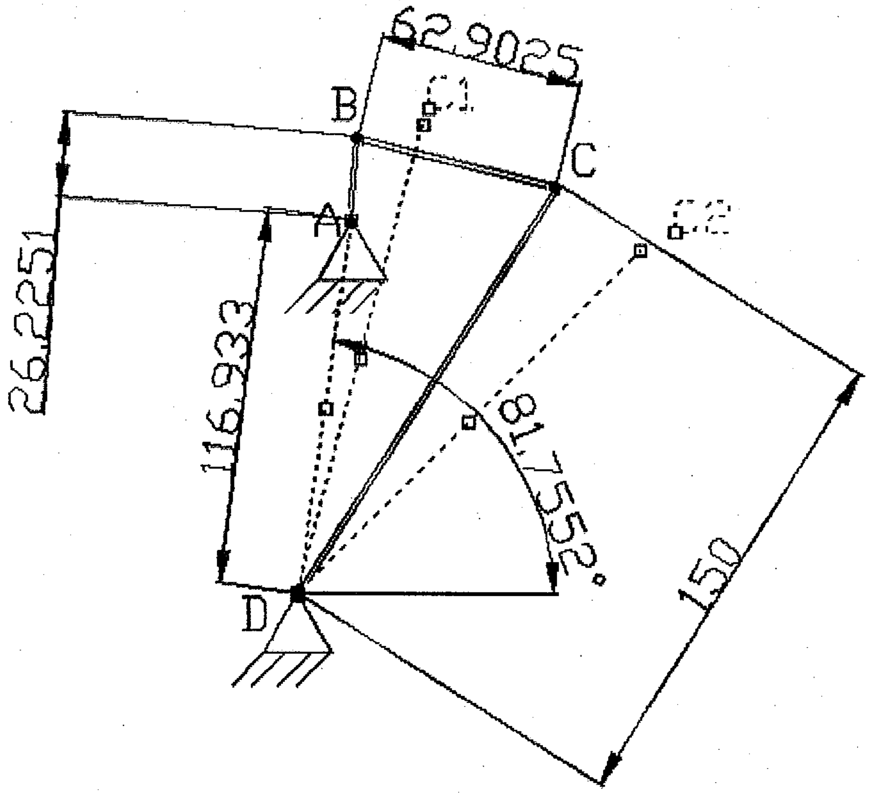

θ1=81.76°
r1=116.93mm
r2=26.23mm (input crank)
r3=62.90mm

9. ANALYTICAL SOLUTION

10.

$$r4\cdot(\cos\theta_4-\cos(\theta_4+\Delta\theta_4))=\overline{AC_2}\cdot\cos\alpha-\overline{AC_1}\cdot\cos(\alpha+\beta)$$

$$r4\cdot(\sin\theta_4-\sin(\theta_4+\Delta\theta_4))=\overline{AC_2}\cdot\sin\alpha-\overline{AC_1}\cdot\sin(\alpha+\beta)$$

$$\begin{bmatrix} r4\cdot(\cos\theta_4-\cos(\theta_4+\Delta\theta_4)) \\ r4\cdot(\sin\theta_4-\sin(\theta_4+\Delta\theta_4)) \end{bmatrix}=\begin{bmatrix} -\cos(\alpha+\beta) & \cos\alpha \\ -\sin(\alpha+\beta) & \sin\alpha \end{bmatrix}\cdot\begin{bmatrix} \overline{AC_1} \\ \overline{AC_2} \end{bmatrix}$$

$$B=A\cdot x$$

$$x=A^{-1}\cdot B$$

$$r2=\frac{\overline{AC_2}-\overline{AC_1}}{2}$$

$$r3=\frac{\overline{AC_2}+\overline{AC_1}}{2}$$

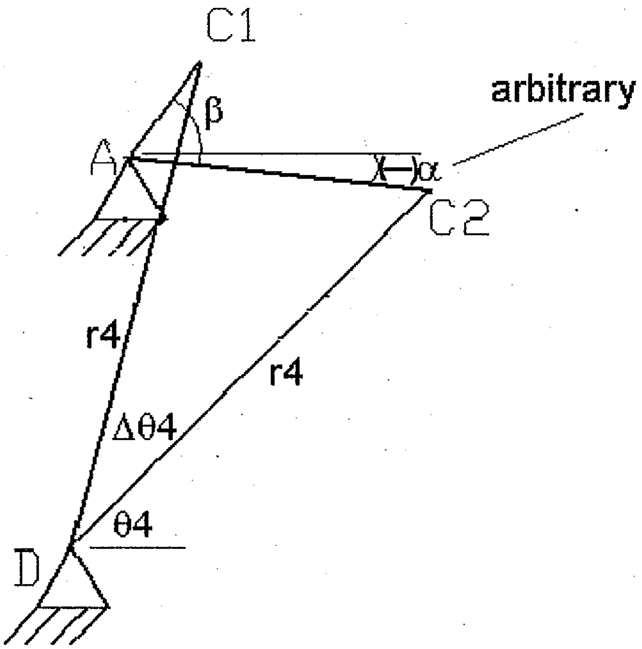

11. r1, θ1 solution:

$$r_1=\sqrt{(r_4\cdot\cos(\theta_4+\Delta\theta_4)-\overline{AC_1}\cdot\cos(\alpha+\beta))^2+(r_4\cdot\sin(\theta_4+\Delta\theta_4)-\overline{AC_1}\cdot\sin(\alpha+\beta))^2}$$

$$\cos\theta_1=\frac{1}{r_1}\cdot(r_4\cdot\cos(\theta_4+\Delta\theta_4)-\overline{AC_1}\cdot\cos(\alpha+\beta))$$

$$\sin\theta_1=\frac{1}{r_1}\cdot(r_4\cdot\sin(\theta_4+\Delta\theta_4)-\overline{AC_1}\cdot\sin(\alpha+\beta))$$

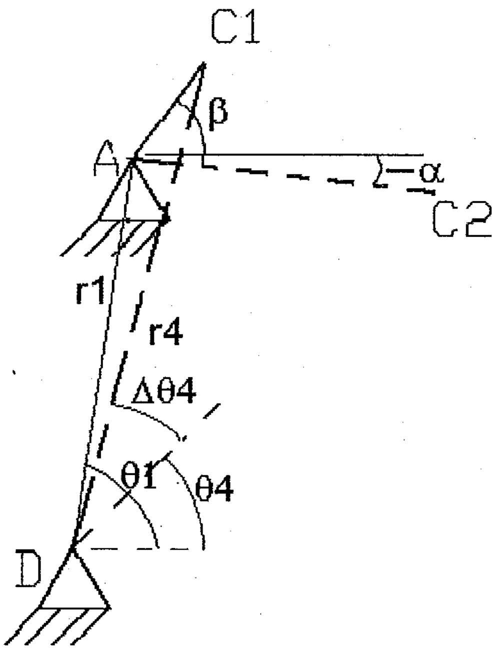

12. The calculations, assuming α=-0.10292 [rad] (in order to have the same mechanism as for the graphical solution)

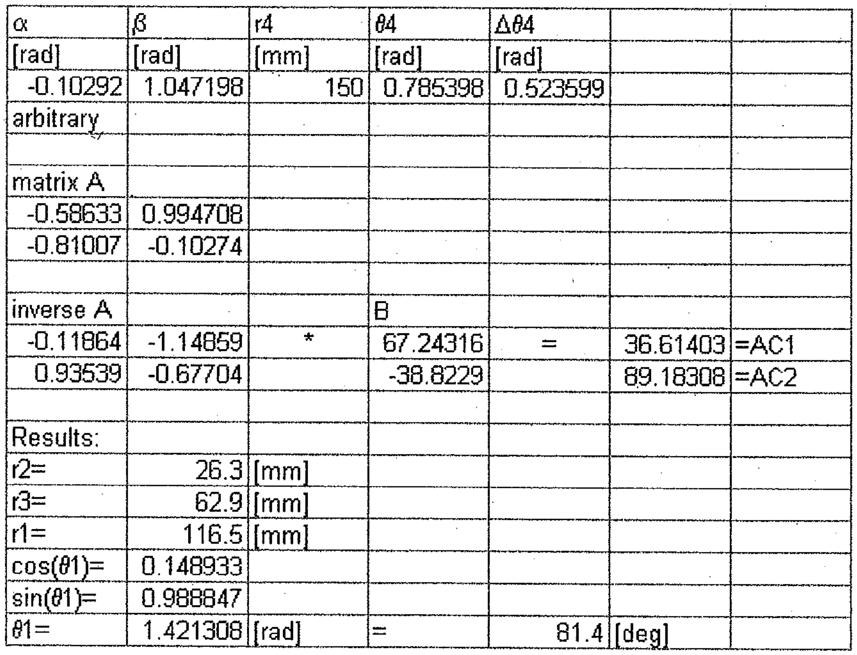

α	β	r4	θ4	Δθ4		
[rad]	[rad]	[mm]	[rad]	[rad]		
-0.10292	1.047198	150	0.785398	0.523599		
arbitrary						
matrix A						
-0.58633	0.994708					
-0.81007	-0.10274					
inverse A			B			
-0.11864	-1.14859	*	67.24316	=	36.61403	=AC1
0.93539	-0.67704		-38.8229		89.18308	=AC2
Results:						
r2=	26.3	[mm]				
r3=	62.9	[mm]				
r1=	116.5	[mm]				
cos(θ1)=	0.148933					
sin(θ1)=	0.988847					
θ1=	1.421308	[rad]	=	81.4	[deg]	

13. The animation of this design:

<u>quick-return mechanism</u>

(The forward stroke is twice long than the back stroke)

5-4

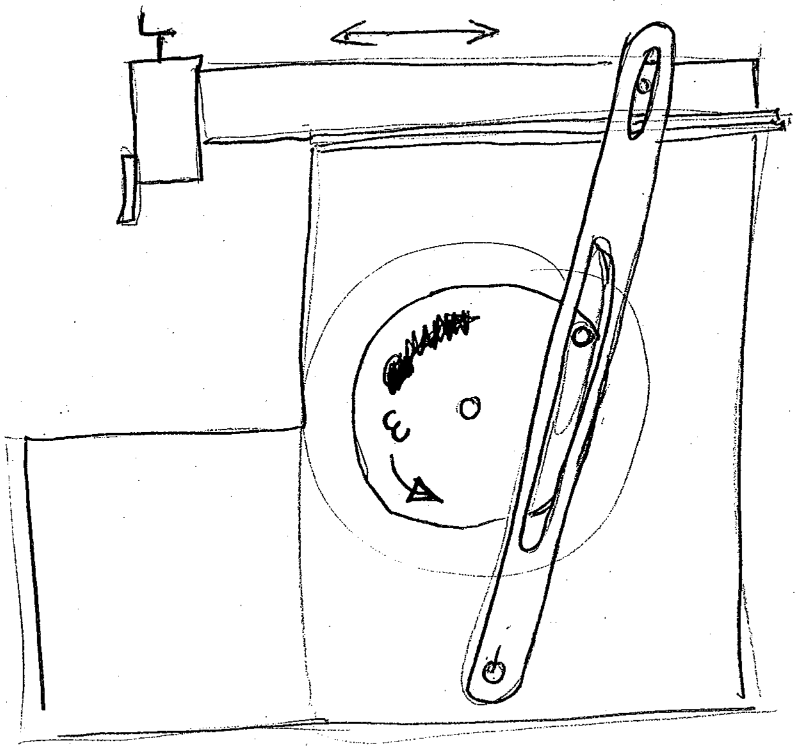

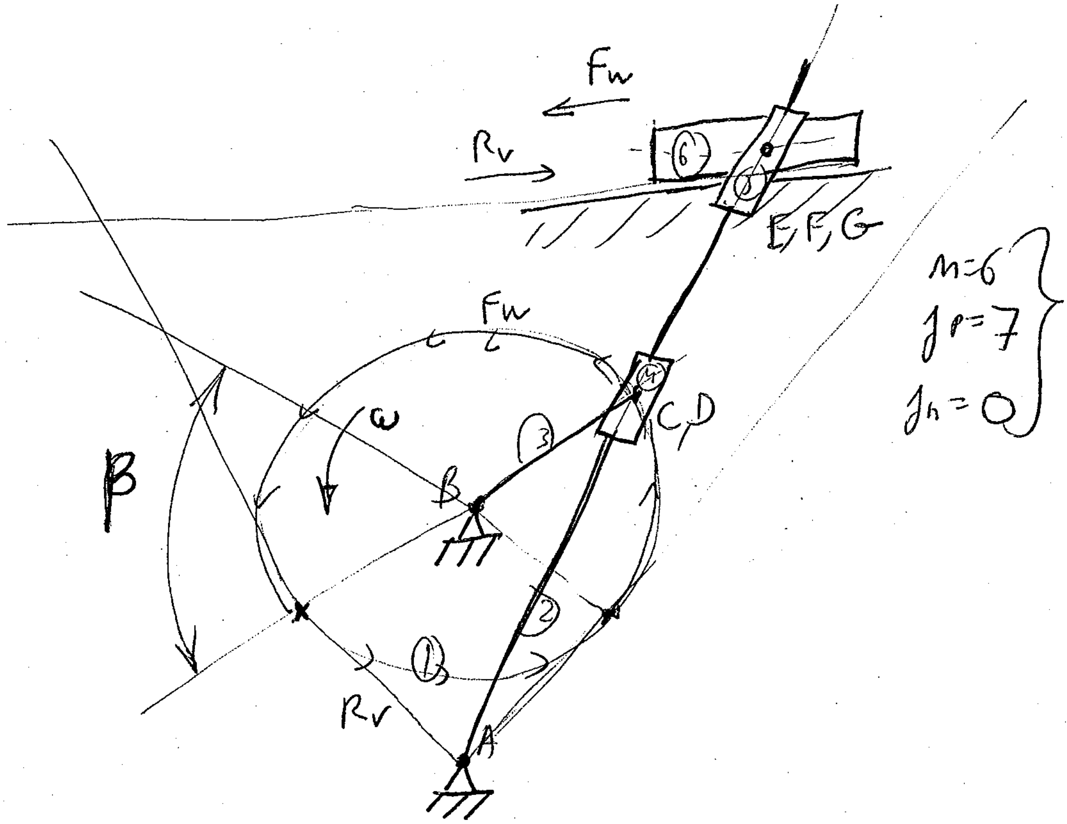

$n=6$
$j_p=7$
$j_h=0$ } DOF = 1

5-5

MECHANISM TO MOVE A LINK BETWEEN TWO POSITIONS

TWO-POINT SYNTHESIS WITH A PIVOTING LINK

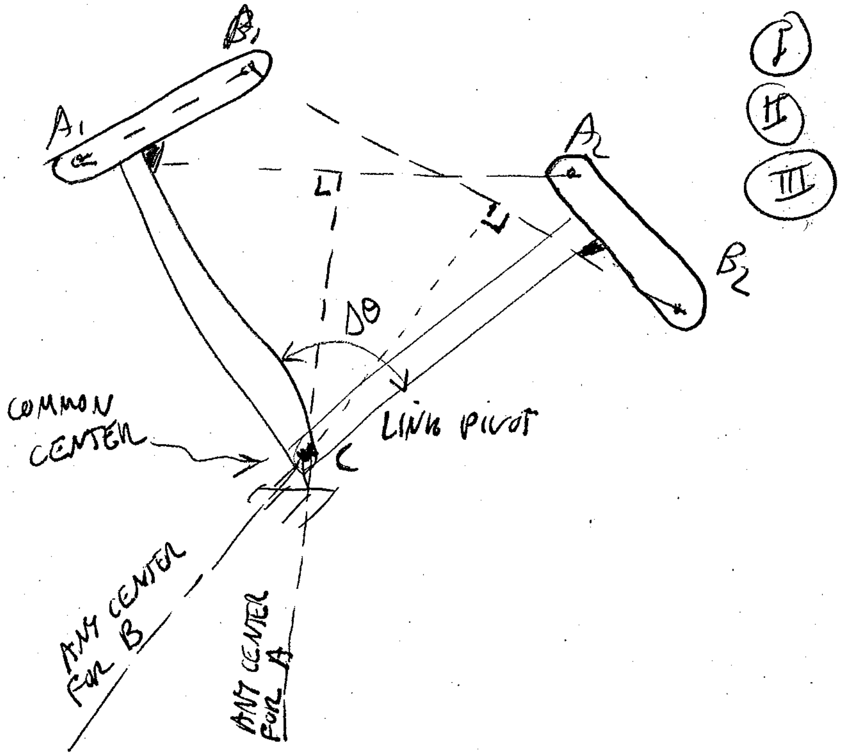

TWO-POINT SYNTHESIS OF THE COUPLER OF A FOUR-BAR MECHANISM

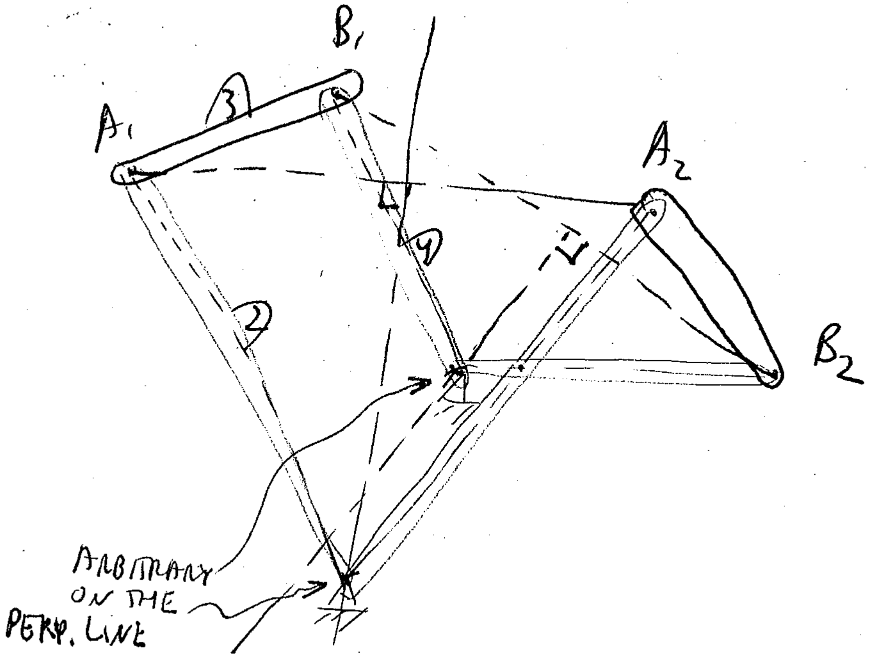

4-22

$\left.\begin{matrix} n=4 \\ j_p=4 \\ j_h=0 \end{matrix}\right\}$ DOF = 1

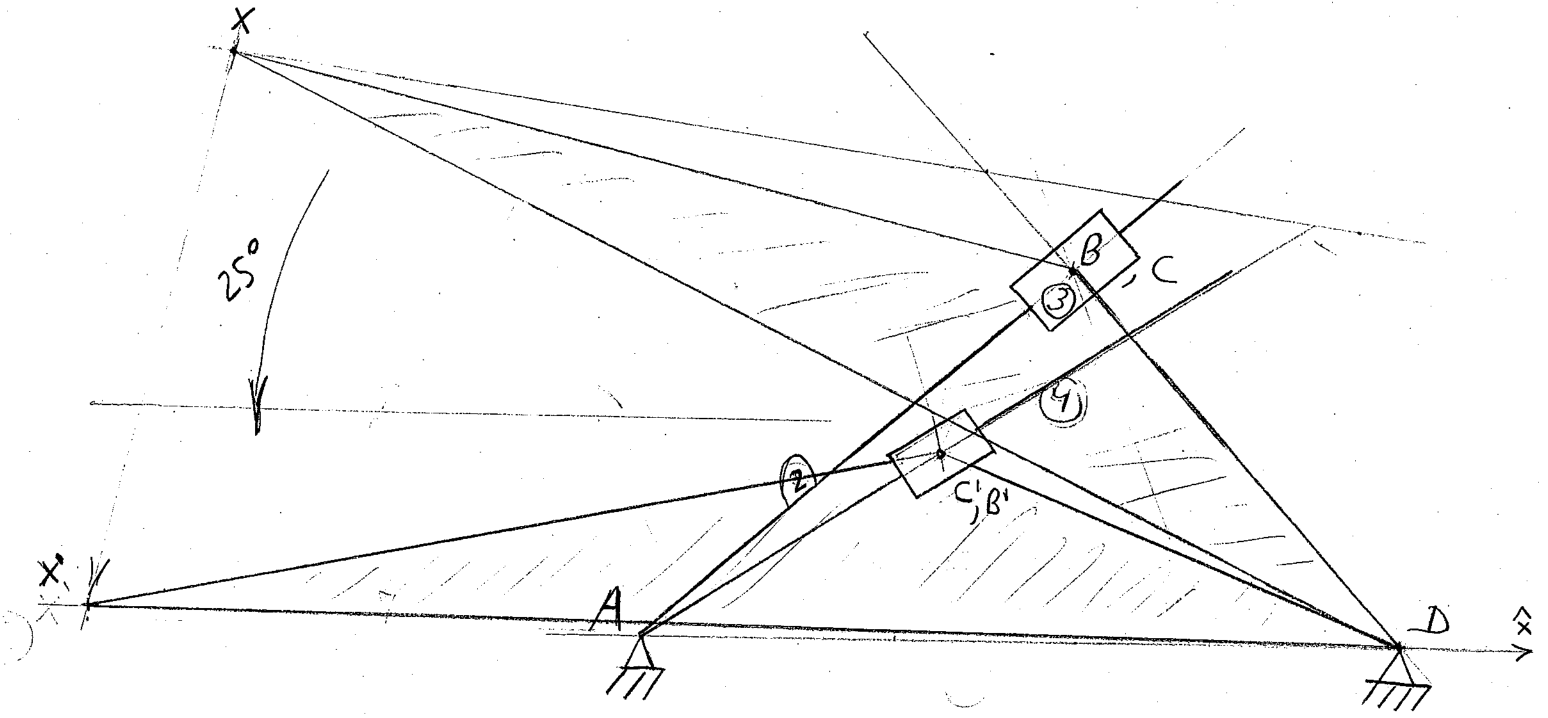

LINEAR DUPLACEMENT OF X : $\overline{XX'} = 226$ mm $\angle 257°$ SCALE 1:3

$Vol = Area \cdot (\overline{AC} - \overline{AC'})$

$\overline{AC} = 225$ mm (223.8 EXACT)

$\overline{AC'} = 140$ mm

$Area = \pi R^2 = \pi \cdot 12.5^2 = 490.87$ mm^2

$Vol = 41{,}724$ mm$^3 \cong 41.7$ cm^3

4-24

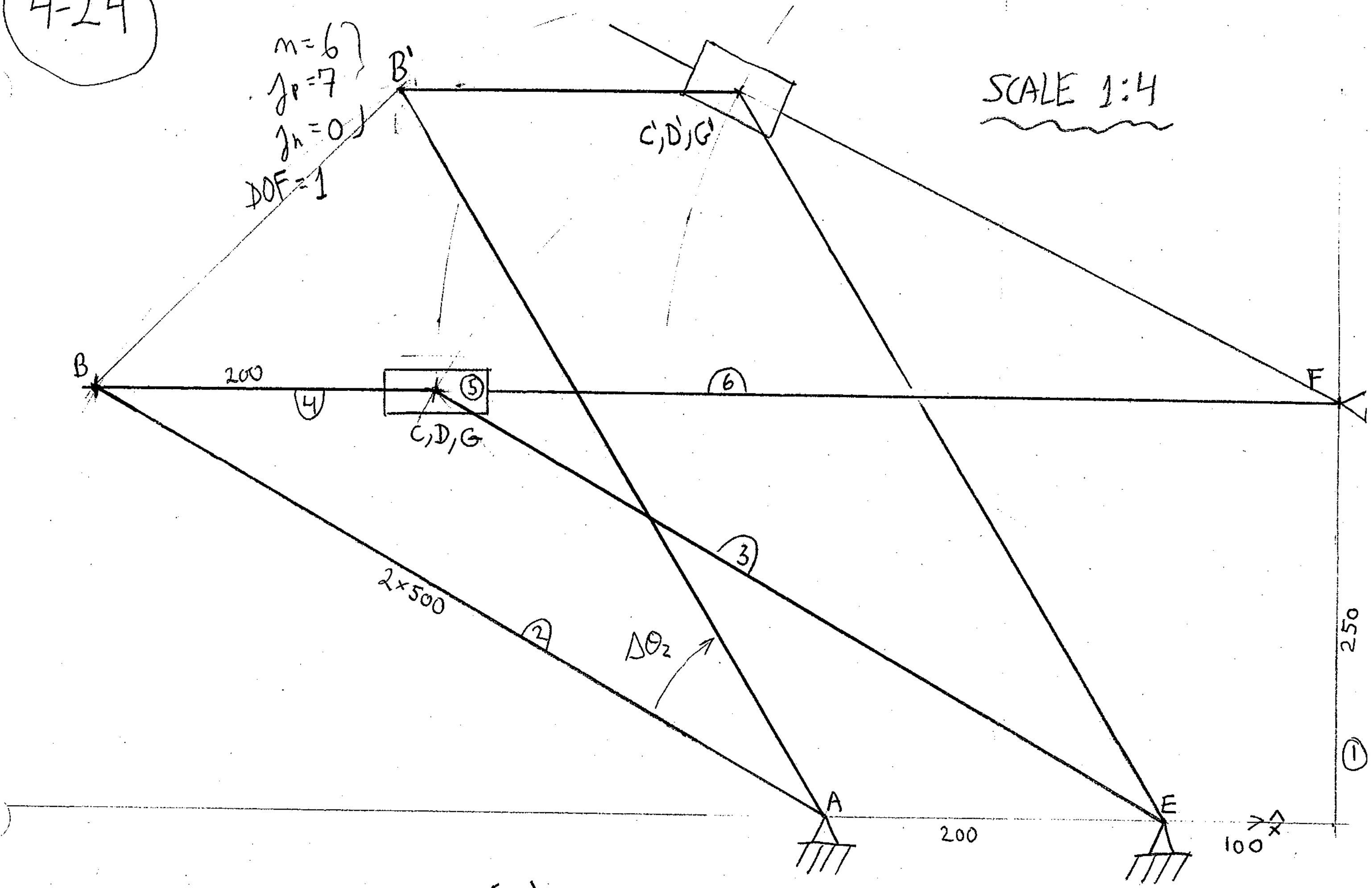

$\Delta\theta_2 \cong -29.5°$ (↻)

LINK 4 = OVEN CARRIER
POINT B BELONGS TO LINK4 } BB' = 252mm ∠45°

(EXACT SOLUTION:
$\Delta\theta_2 = -28.92°$ (↻)
BB' = 249.7mm ∠45.5°)

4-36

SCALE:

60mm : 1m

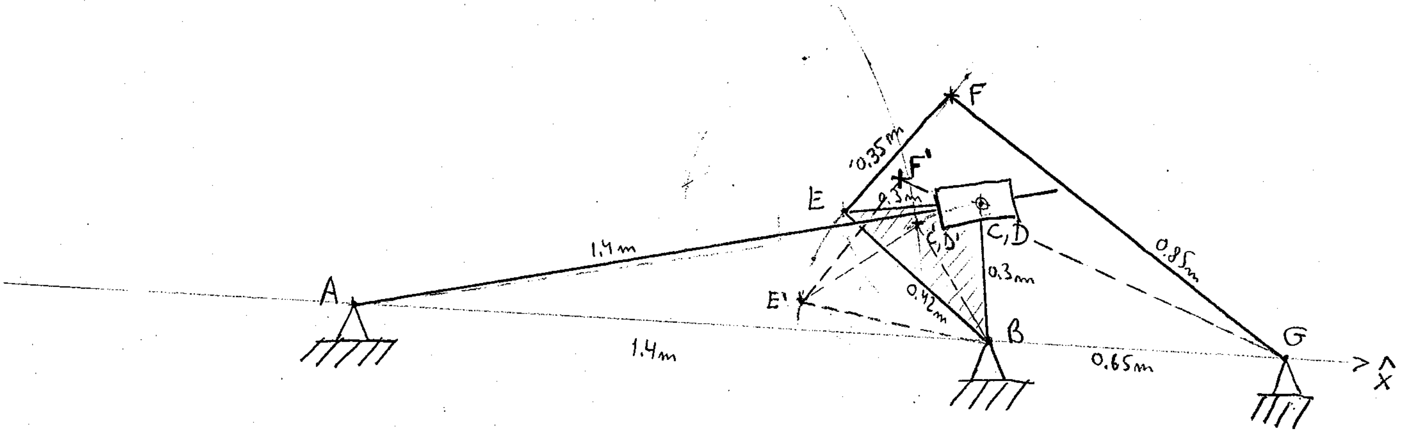

$\widehat{FGF'} = +14° (↺)$

4-55

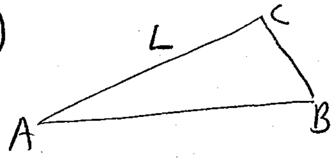

$$\cos \widehat{CBA} = \frac{0.3^2+1.4^2-L^2}{2\cdot 0.3\cdot 1.4}$$ LAW OF COSINES

$$\cos \widehat{CBE} = \frac{0.3^2+0.42^2-0.3^2}{2\cdot 0.3\, 0.4} = 0.7$$

$$\widehat{CBE} = 45.573°$$

$$\boxed{\widehat{ABE} = \widehat{CBA} - \widehat{CBE}} = \widehat{CBA} - 45.573°$$

$$\widehat{EBG} = 180° - \widehat{ABE} = 225.573° - \widehat{CBA}$$

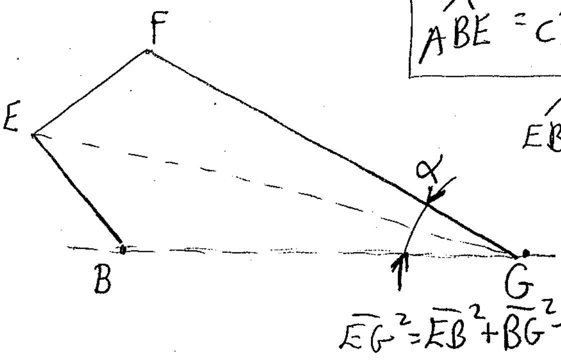

$$\overline{EG}^2 = \overline{EB}^2 + \overline{BG}^2 - 2\cdot\overline{EB}\cdot\overline{BG}\cos\widehat{EBG}$$

$$\overline{EG}^2 = 0.42^2 + 0.65^2 - 2\cdot 0.42\cdot 0.65 \cos\widehat{EBG}$$

$$\cos\widehat{EFG} = \frac{\overline{EG}^2 - \overline{EF}^2 - \overline{FG}^2}{2\cdot\overline{EF}\cdot\overline{FG}}$$

$$\cos\widehat{EFG} = \frac{\overline{EG}^2 - 0.35^2 - 0.85^2}{2\cdot 0.35\cdot 0.85}$$

$$\left.\begin{aligned} \sin\widehat{EGB} &= \frac{\overline{EB}}{\overline{EG}}\cdot\sin\widehat{EBG} \\ \sin\widehat{EGF} &= \frac{\overline{EF}}{\overline{EG}}\cdot\sin\widehat{EFG} \end{aligned}\right\} \boxed{\alpha = \widehat{EGB} + \widehat{EGF}}$$

LAW OF SINES

L (m)	α (°)
1.4	42.68
1.3	33.14
(1.25)	28.36

$\Delta\alpha = 42.68 - 33.14$

$\Delta\alpha = 9.54°$

(COMPARISON WITH 4-36:
$\Delta\alpha = 42.68 - 28.36$

4-70

SCALE 1:1

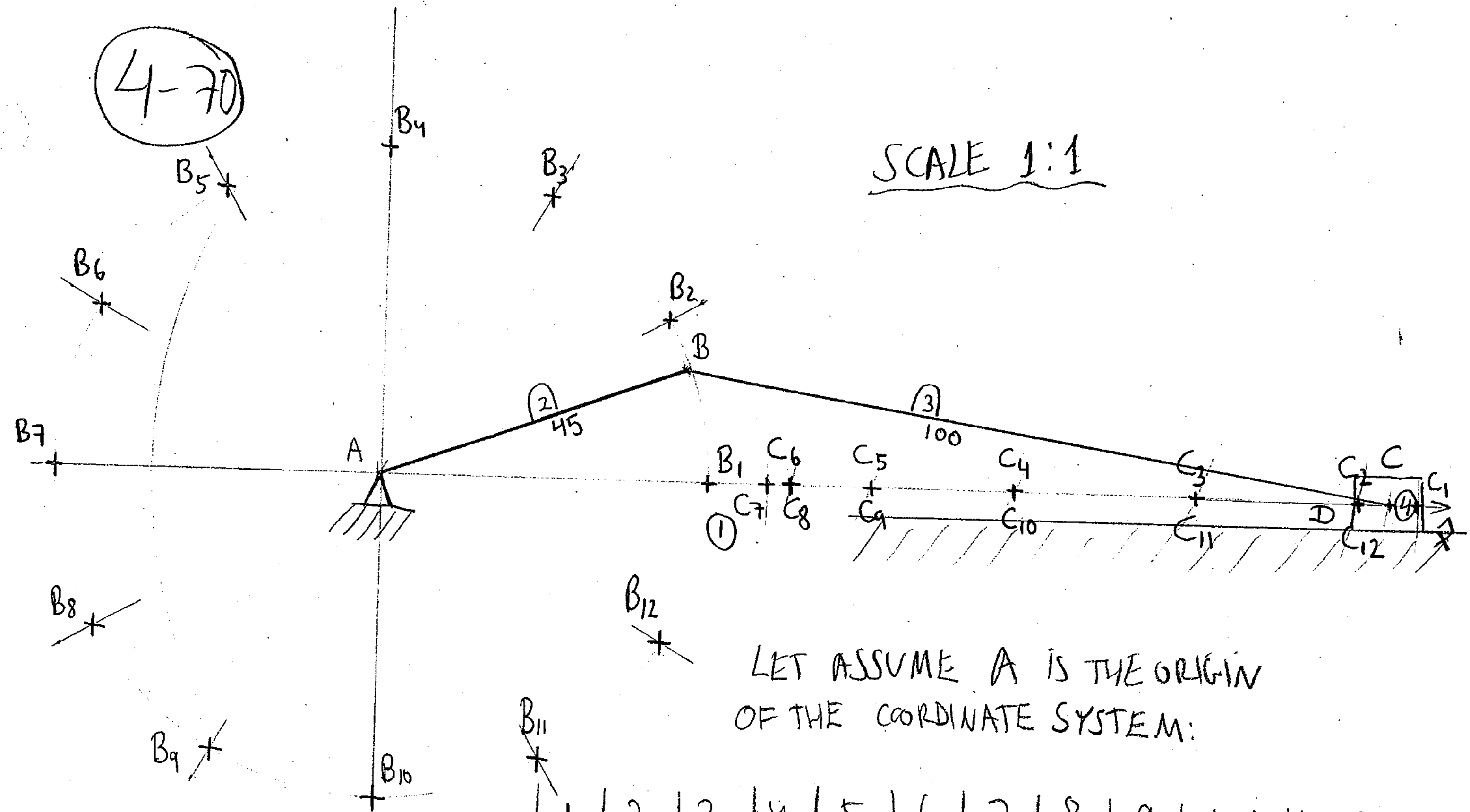

LET ASSUME A IS THE ORIGIN OF THE COORDINATE SYSTEM:

	1	2	3	4	5	6	7	8	9	10	11	12
B [°]	0	30	60	90	120	150	180	210	240	270	300	330
C [mm]	145	137	114.5	89	69	57.5	54.5	57.5	69	89	114.5	137

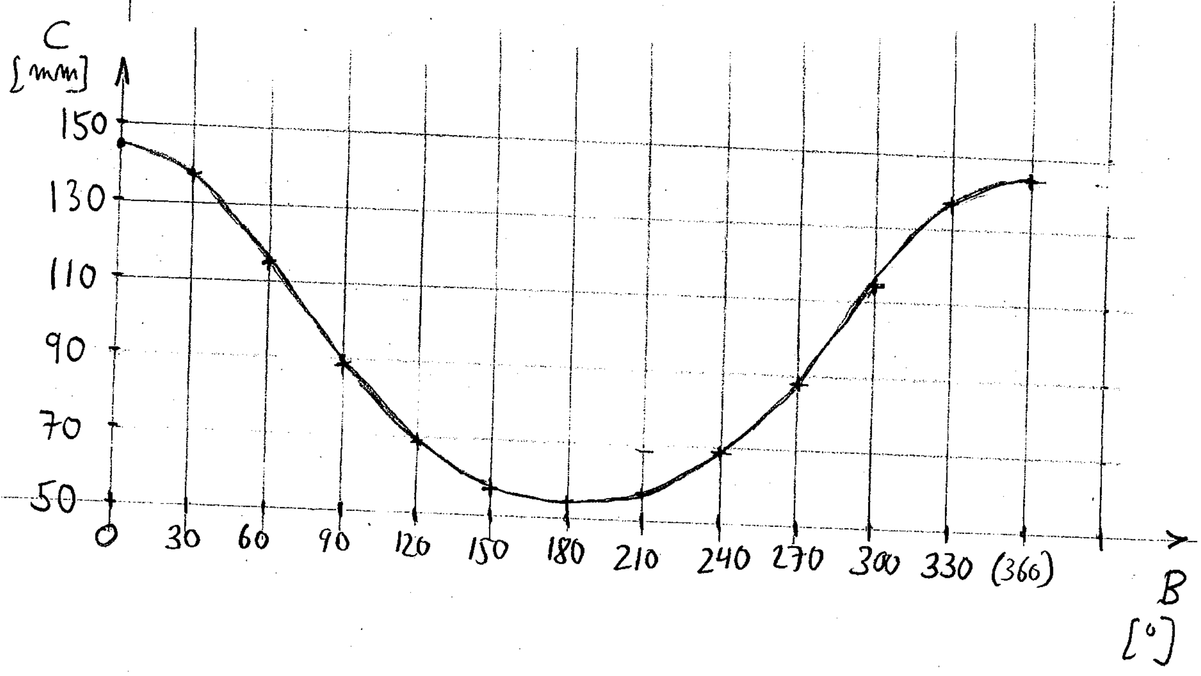

4-76

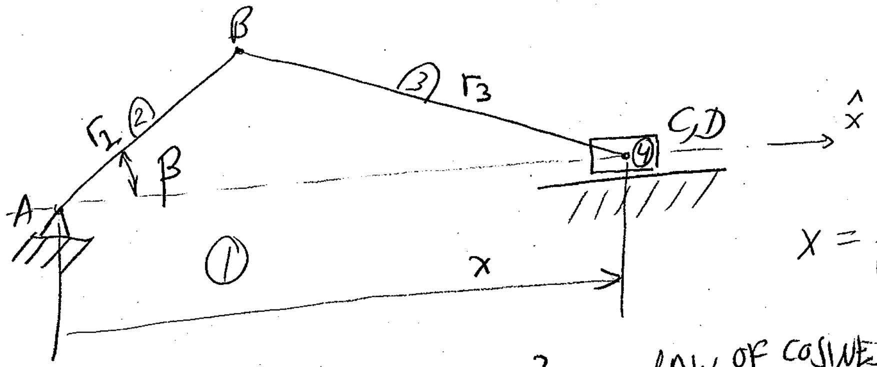

$x = f(\beta)$ - ?

$$x^2 + r_2^2 - 2 x r_2 \cos\beta = r_3^2 \leftarrow \text{LAW OF COSINES}$$

$$x^2 - (2 r_2 \cos\beta) x - (r_3^2 - r_2^2) = 0$$

$$x = \frac{+2 r_2 \cos\beta \pm \sqrt{4 r_2^2 \cos^2\beta + 4 (r_3^2 - r_2^2)}}{2} = r_2 \cos\beta \pm \sqrt{r_2^2 \cos^2\beta + r_3^2 - r_2^2}$$

X IS ALWAYS POSITIVE ($r_3 > r_2$: cranck slider constrain)

$$\sqrt{r_2^2 \cos^2\beta + (r_3^2 - r_2^2)} > \sqrt{r_2^2 \cos^2\beta} = r_2 \cdot \cos\beta$$

SO THE SOLUTION "$r_2 \cos\beta - \sqrt{\qquad}$" WILL GIVE A NEGATIVE X,

THEN, THE SOLUTION IS:

$$\boxed{X = r_2 \cos\beta + \sqrt{r_2^2 \cos^2\beta + r_3^2 - r_2^2}}$$

$r_2 = 45 mm$
$r_3 = 100 mm$

EML 3262 spring 2005															
						1/13/2005					Matlab?	HM # 1		HM # 2	
Name	PantherID	Phone Number	Campus Email		1/11/2005	Are you familiar with PRO-E?(yes			1/13/2005	1/18/2005	1/20/2005		2/3/2005		Quiz # 1
						Modeling of parts	Assemblies	mechanism design							
Alvarez,Jorge L	1290400	3052744580	jalva013@fiu.edu	alvjorge@aol.com	1	y	y	n	1		y	1	1	1	65
Andara,Melanie Elizabeth	1374312	3052287639	manda001@fiu.edu		1	y	y	n	1	1	y	1	1	1	55
Bellorin,Ronald F	1325730	3052587198	rbelo001@fiu.edu		1	y	y	n	1	1	y	1	1	1	95
Bonilla,Adriana Catalina	1321865	9543896296	aboni002@fiu.edu		1	y	y	n	1	1	y				
Brand,Max	1396896	9545772282	mbran003@fiu.edu	mbran003@fiu.edu	1	y	y	n	1	1	y	1	1	1	100
Brenner,Danny E	1310512	3052639528	dbren001@fiu.edu		1	y	y	n	1	1	y	1	1	1	53
Brereton,Marc R	1391782	9546498002	mbrer001@fiu.edu	rastabiz@hotmail.com	1						y	1	1		60
Caicedo,Carlos	1370775	305/513-4829	ccaic001@fiu.edu		1	n	y	n	1	1	n	1	1		75
Caorsi,Miguel	1399282	3059056074	mcaor001@fiu.edu								n	1	1	1	75
Diaz,Ariel	1396467	3052078669	adiaz024@fiu.edu	arieldiaz11@aol.com	1	y	n	n	1	1	n	1	1	1	90
Duarte,Daniel	1013134	3052251015	dduar001@fiu.edu			y	y	n	1	1	n	1		1	70
Evelyn,Elliot	1399800	8686521772	eevel001@fiu.edu		1	y	y	n	1		y		1		80
Galeano,Boanerges Ruben	1352635	3055517255	bgale001@fiu.edu	boa17@cs.com	1	y	y	n	1	1		1	1	1	75
Garcia,Francisco Javier	1319297	3057543862	fgarc003@fiu.edu	fgarcia@aerothrust.com		y	y	n	1	1	y		1		
Garcia,Maribel	1322452	3052212976	mgarc054@fiu.edu		1	y	y	n	1	1	y	1	1	1	80
Gomez,Cindy	1390408	9544244352	cgome006@fiu.edu		1	y	y	n	1	1	y	1	1		90
Grata,Paul John	1282007	3055586939	pgrat001@fiu.edu	Paul.Grata@gmail.com	1	y	y	n	1	1	y	1	1	1	85
Gutierrez,Ernesto Jose	1281667	3055197617	egutie07@fiu.edu	g1ernie@yahoo.com	1	y	y	n	1	1	y	1	1	1	60
Harper,Damian Jabari	1399737	3053489376	dharp002@fiu.edu	damianhdj@yahoo.com	1	n	n	n	1	1	n	1	1	1	65
Harper,Shaka Akili	1012782	3053489376	sharp003@fiu.edu	akili_2000@yahoo.com		n	n	n	1	1	n	1	1	1	45
Johnson,Matthew	1099870	7038604437	mjohns03@fiu.edu	mab_johnson@yahoo.com	1	y	y	n	1	1	n	1	1	1	70
Lazzeretti,Yuri	1093801	3052736361	ylazz001@fiu.edu	yuri_lazzeretti@yahoo.com	1	y	y	n	1	1	y	1		1	80
Linton,Crystal Carole	1398304	000/000-0000	clint002@fiu.edu		1	y	y	y	1	1	y	1	1		40
Maaliki,Alaa	1053723	305/265-2245	amaal001@fiu.edu	amaaliki0010@yahoo.com		y	n	n	1	1	y		1	1	89
Marshall,Natalie Ladonna	1306053	9548944700	nmars001@fiu.edu		1	y	y	n	1	1	y	1	1	1	65
Martinez,Georgette	1339663	3052617863	gmart011@fiu.edu	gmartine@mdc.edu	1	y	y	n	1	1			1		35
Matus,Daniel A	1398577	3054311264	dmatu002@fiu.edu		1	y	y	n	1	1	y	1	1	1	95
Mayer,Verdi M	1358420	3055952633	vmaye001@fiu.edu		1	y	n	n	1	1	y	1	1		40
Mesner,Grant Garwood	1366034	3055984861	gmesn001@fiu.edu	mesnergrant@bellsouth.net	1	y	y	n	1	1	n	1	1	1	85
Mihalovits,Matthew Shaun	1076857	9543271536	mmiha001@fiu.edu		1	y	y	n	1	1	y		1		60
Moorley,Trevis Visham	1399021	3057904112	tmoor003@fiu.edu	tmoorley@yahoo.com	1	y	y	y	1	1	y	1	1	1	60
Obando,Fernando	1016302	3055947580	foban003@fiu.edu		1	y	y	n		1	n	1	1	1	55
Ocano,Gonzalo	1021312		gocan001@fiu.edu		1	y	y	n	1	1	n	1	1	1	90
Olmstead,Steven J	1340224	3054513025	solmst01@fiu.edu	stevenolms@aol.com	1	y	y	n	1	1	n	1	1	1	100
Pamphile,Thierry	1024196	3056859525	tpamp001@fiu.edu	thierry482@yahoo.com	1	y	y	n	1		y	1	1	1	75
Patterson,Michael A	1094554	305/394-2611	mpatt003@fiu.edu		1	y	y	n	1		y	1			57
Ramirez Rivera,Julio Jose	1358822	786/275-0154	jrami001@fiu.edu	paturro20@hotmail.com	1	y	y	n		1	n	1		1	25
Rendon,Felipe	1334090	3057150184	frendo01@fiu.edu	ipsbvr6@hotmail.com	1	y	y	n	1	1	y	1	1	1	65
Saluzzio,Juan Bautista	1372735	3052257727	jsalu001@fiu.edu	jusa14@aol.com	1	y	y	n	1	1			1	1	100
Sanchez,Sergio Francisco	1333502	3052450904	ssanc002@fiu.edu	dallin@3rdoct.org	1	y	y	n	1	1	y			1	66
Sarria,Cesar Augusto	1339149	3058240976	csarr001@fiu.edu	csarria@fantuzzila.com		y	y	n		1	y	1	1	1	
Scipio,Sophia E	1308401	3055544949	sscip002@fiu.edu		1	y	y	n	1	1	y	1	1	1	90
Sepulveda,Luis A	1349774	3055539664	lsepu001@fiu.edu		1	y	y	n	1	1		1	1	1	80
Showalter,Keith Russell	1122826	9042463628	kshow001@fiu.edu		1	y	y	n	1	1	t	1		1	100
Telusma,Mackenson	1362777	3057568793	mtelu001@fiu.edu	mr_math01@hotmail.com	1	y	y	n	1	1		1	1		48
Tercero Pereira,Jorge Estuardo	1014132	7863989885	jterc001@fiu.edu		1	y	y	n	1	1	y	1	1	1	83
Toledo,Pedro Luis	1374102	3052214772	ptole001@fiu.edu	pedro302@aol.com	1	y	y	n	1		n	1	1	1	55
Valdivieso,Mario D	1369320	305/261-8757	mvald011@fiu.edu		1	y	y	n	1	1	y	1	1	1	60
Valencia,Luis Guillermo	1372270	3052553611	lvale001@fiu.edu	guilloval@hotmail.com		y	y	n		1	y	1			45
Velez,Juan Sebastian	1399857	7862906846	jvele002@fiu.edu	superseyas69@hotmail.com	1	y	y	n	1	1		1	1		
Vidal,Juan R	1322725	3056889623	jvidal04@fiu.edu	jrssax@aol.com	1	y	n	n	1	1	n	1	1	1	95
Vidaud,Alberto J	1144711	3054691160	avidau01@fiu.edu	alberto@fiu.edu	1	y	y	y	1	1	y	1	1	1	55
Villegas,Juan F	1317660	9544744550	jvill001@fiu.edu	jvillega@mdc.edu	1	y	y	n	1	1	n	1	1	1	80
Wolff,Michael Allen	1103264	3052325468	mwolf002@fiu.edu	mwolff306@aol.com	1	y	y	n	1			1	1	1	70
Zamora,Andres	1397908	9542407628	azamo004@fiu.edu	saoco76@yahoo.com		y	y	n		1	y	1	1	1	83
Roos Hector	1096368	7862298759	hroos001@fiu.edu		1	y	y	n	1	1		1	1		40
Ferrero Danilo	1305062	3058985803	danyfg@msn.com		1										
Lattibeaudiere Sean	1223838	9544314925	slatt001@fiu.edu		1										
Medina Michael	1381726	3057206444	mike@puga.com		1	y	y	n	1		n				
Patrick Belizaire												1			50

QUIZ #1

UPDATE: 2/22/05

Florida International University
Department of Mechanical and Materials Engineering
Kinematics & Mechanism Design

EML 3262 Quiz # 1 – Version A Feb. 10, 2005

<u>Follow the instructions before you begin the quiz:</u>
This test is 40 minutes long. It is not permitted to pass or receive any hardware nor software during the quiz. Use your own papers, pens, pencils, calculators, etc.
ONLY The following items are allowed during the quiz: compass, protractor, ruler, 45° triangle, 60° triangle, pencil, eraser, pens, non programmable calculator, <u>one</u> A4 paper with your remarks, formulas, etc., White papers

Write your first and last name, your Panther I. D. & the quiz version (A)
<u>Explain your steps, use the adequate diagrams.</u>

Good Luck!

For the given mechanism:

1. Draw the kinematic diagram (freehand). *(25%)*
2. Calculate the degrees of freedom. *(25%)*
3. Position the links and reposition them as <u>the sliding platform moves 200mm to the right (→)</u> (draw scaled) *(25%)*
4. Determine the change in length of the linear actuator. *(15%)*
5. Choose the correct answer: *(10%)*
   A four bar mechanism has at least one revolving link if
   a. The sum of the lengths of the shortest and the longest links is greater than the sum of the lengths of the other links.
   b. The sum of the lengths of the shortest and the longest links is smaller than the sum of the lengths of the other links.
   c. Only when the sum of the lengths of the shortest and the longest links is equal to the sum of the lengths of the other links.
   d. There is always a revolving link.

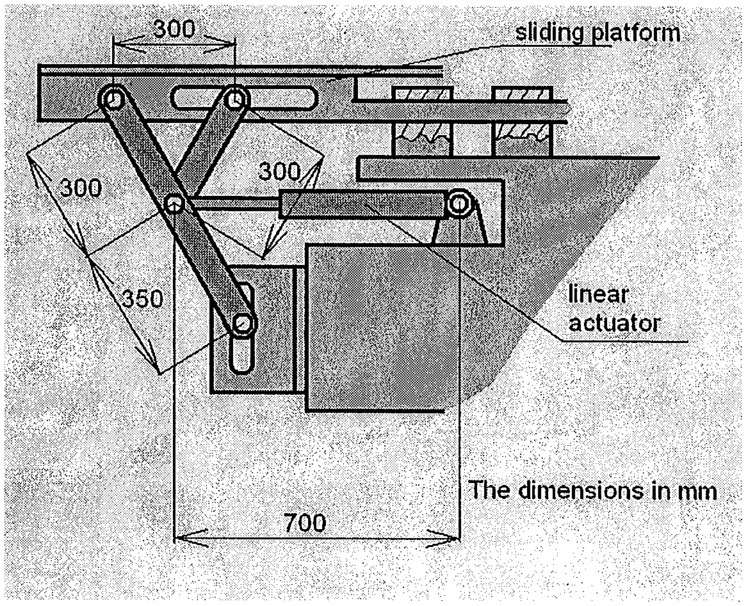

A

Florida International University
Department of Mechanical and Materials Engineering
Kinematics & Mechanism Design

EML 3262 Quiz # 1 – Version B Feb. 10, 2005

<u>Follow the instructions before you begin the quiz:</u>
This test is 40 minutes long. It is not permitted to pass or receive any hardware nor software during the quiz. Use your own papers, pens, pencils, calculators, etc.
ONLY The following items are allowed during the quiz: compass, protractor, ruler, 45° triangle, 60° triangle, pencil, eraser, pens, non programmable calculator, <u>one</u> A4 paper with your remarks, formulas, etc., White papers

Write your first and last name, your Panther I. D. & the quiz version (B)

<u>Explain your steps, use the adequate diagrams.</u>

Good Luck!

For the given mechanism:

1. Draw the kinematic diagram (freehand). *(25%)*
2. Calculate the degrees of freedom. *(25%)*
3. Position the links and reposition them as the <u>sliding platform moves 200mm up (↑)</u> (draw scaled) *(25%)*
4. Determine the change in length of the linear actuator. *(15%)*
5. Choose the correct answer: *(10%)*
   A four bar mechanism has at least one revolving link if
   a. The sum of the lengths of the shortest and the longest links is greater than the sum of the lengths of the other links.
   b. Only when the sum of the lengths of the shortest and the longest links is equal to the sum of the lengths of the other links.
   c. The sum of the lengths of the shortest and the longest links is smaller than the sum of the lengths of the other links.
   d. There is always a revolving link.

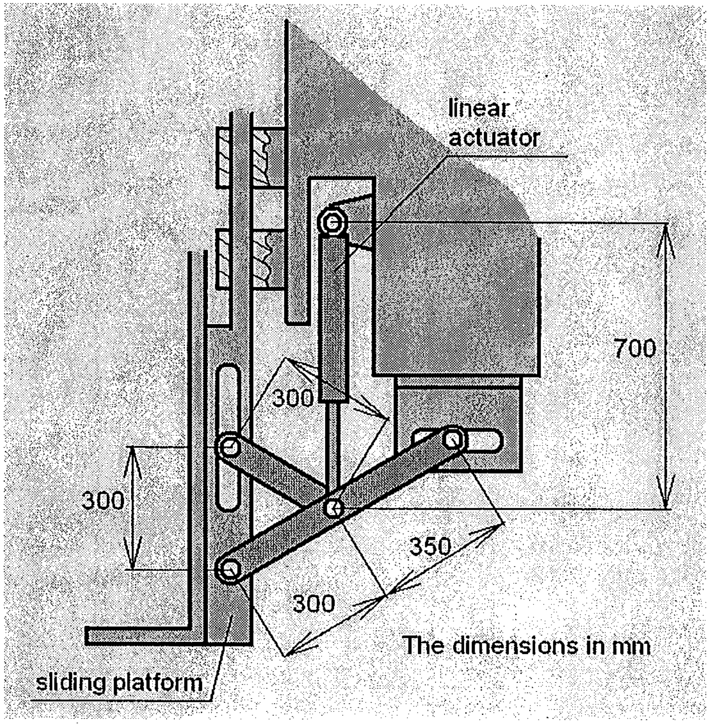

B

QUIZ # 1 – SOLUTION

VERSION A:

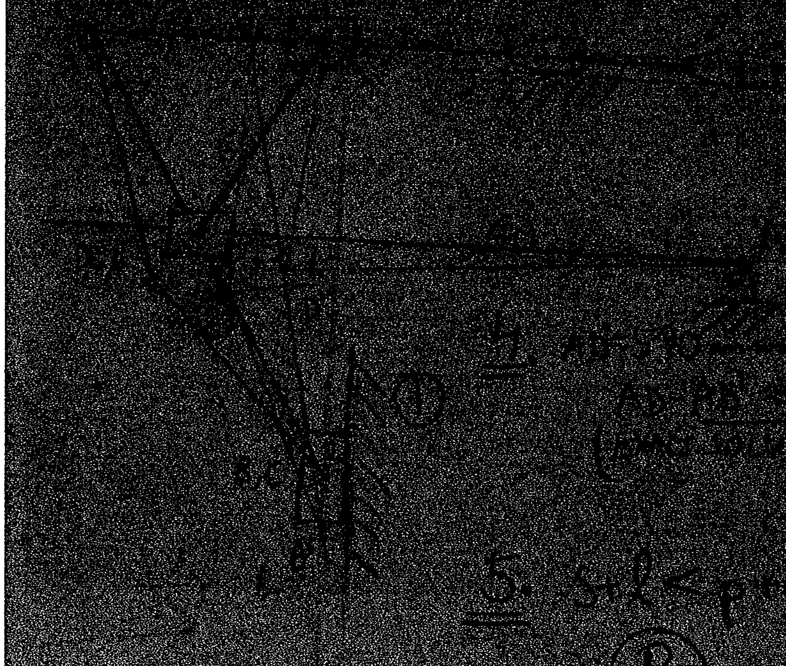

4. [illegible]

[illegible]

5. $s+l < p+q$

Ⓑ

3.

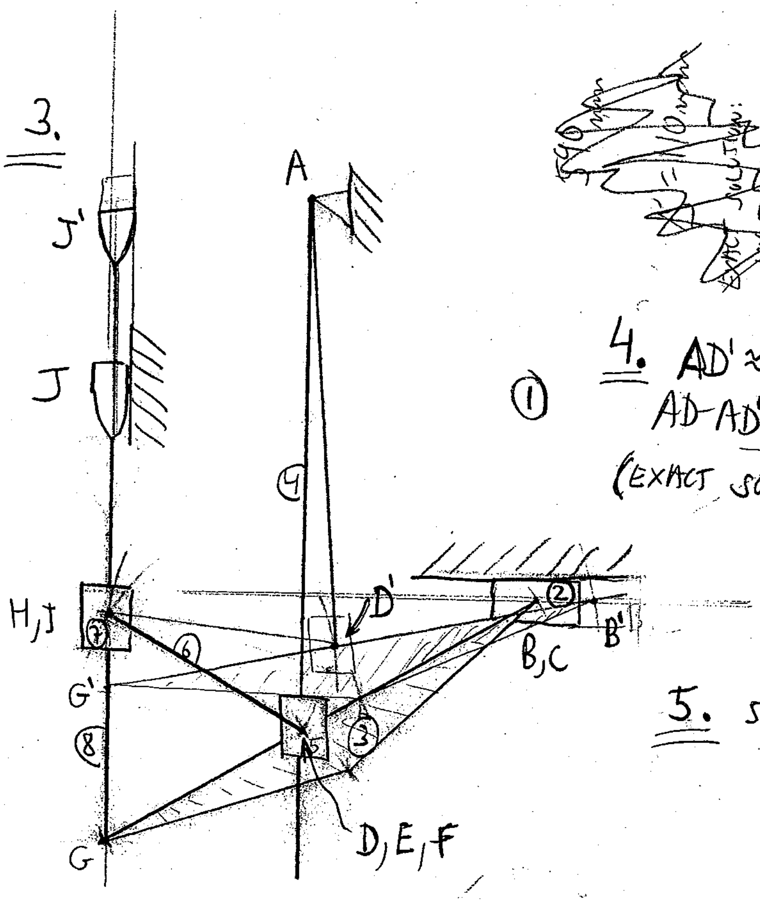

~~590mm~~
~~AD'=110mm~~
~~EXACT SOLUTION: 106.7mm~~

4. AD' ≈ 590 mm
AD-AD' ≅ 110 mm
(EXACT SOLUTION: 106.7 mm)

5. s+l < p+q
Ⓒ

590mm

700-590 mm = 110 mm

EXACT SOLUTION

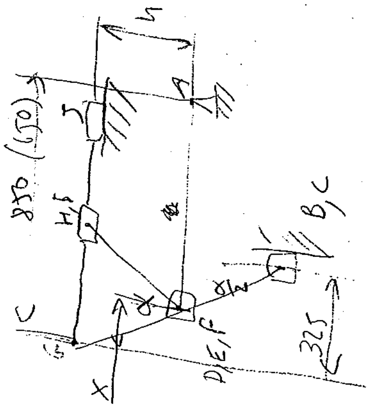

$h = \sqrt{300^2 - 150^2}$

$\sin\left(\frac{\alpha}{2}\right) = \frac{150}{300}$ $\alpha = 60°$

$\frac{\alpha}{2} = \qquad) = 11.087489°$

$x = 300 \sin\frac{\alpha}{2} = 57.6923$

$= 2944$

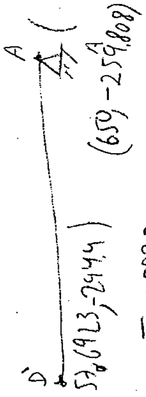

$\overline{DA} = 593.3$

$\Delta \approx 106.7$

590mm

700-590mm = 110mm

EXACT SOLUTION

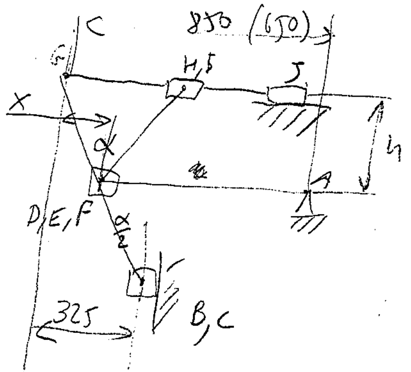

$h = \sqrt{300^2 - 150^2}$

$\sin\left(\frac{\alpha}{2}\right) = \frac{150}{300}$ $\alpha = 60°$

$\frac{\alpha}{2} = a\sin\left(\frac{325-200}{650}\right) = 11.087489°$

$x = 300\sin\frac{\alpha}{2} = 57.6923$

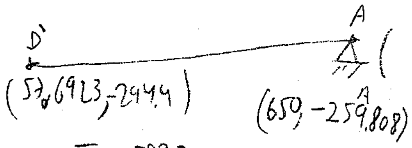

$\overline{D'A} = 593.3$

$\Delta\ 106.7$

3.

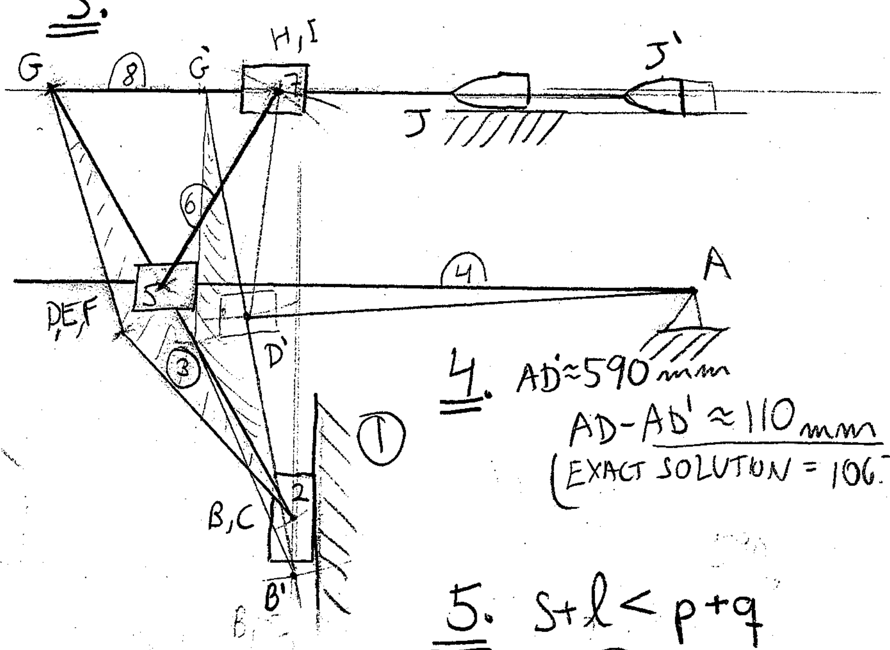

4. AD' ≈ 590mm

AD - AD' ≈ 110mm

(EXACT SOLUTION = 106.7mm)

5. $s + l < p + q$

Ⓑ

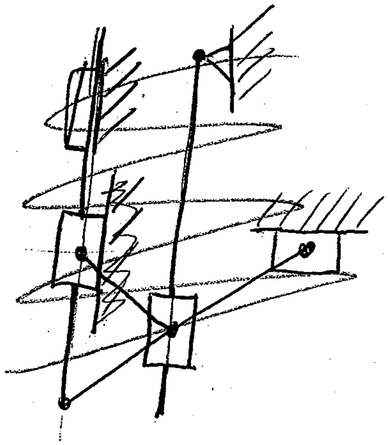

VERSION B

1.

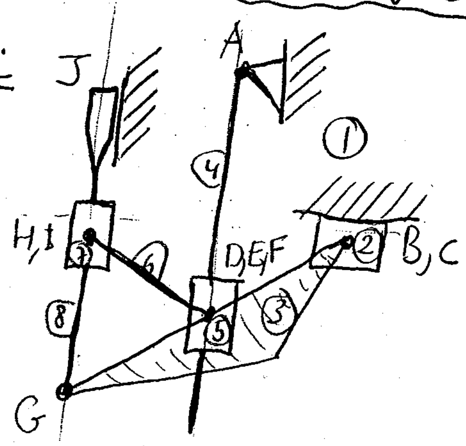

2.

$n = 8$
$j_p = 10$
$j_h = 0$

$DOF = 3(8-1) - 2 \cdot 10 - 0$

$DOF = 1$

5-6

THREE POINT SYNTHESIS

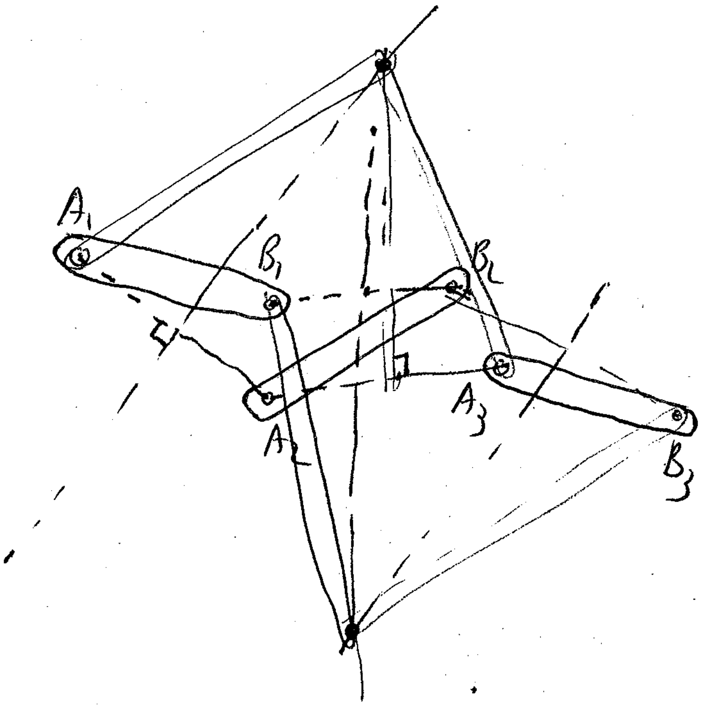

MORE ON TWO-POSITION, DOUBLE ROCKER DESIGN

(OR USED AS DOUBLE ROCKER)

INPUT GIVEN: $\overset{\theta_4,}{\Delta\theta_4}$, l_4

OUTPUT GIVEN: $\Delta\theta_2$ θ_2

$$\left(\frac{\Delta\theta_2}{\Delta\theta_4} = \text{TRANSMITION RATIO} \right)$$

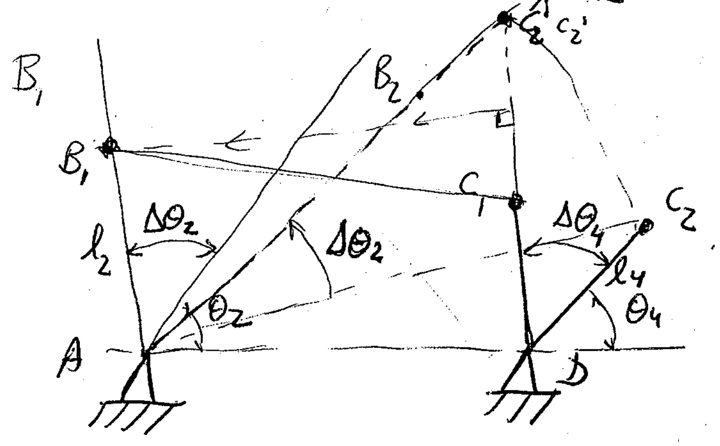

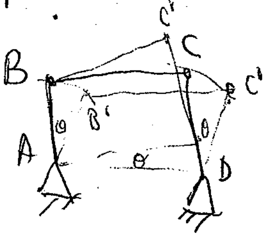

BRING POINT B_2 TO $B1$

SOLUTION

5-7

4 BAR MECHANISM

THREE POINT SYNTHESIS + FIXED JOINTS GIVEN

ASSUME

① A POINT $\overset{\text{OF INTEREST,}}{}$ AND ONE JOINT ON THE COUPLER GIVEN IN THREE POSITIONS

② A FIXED JOINT GIVEN

IN GENERAL:

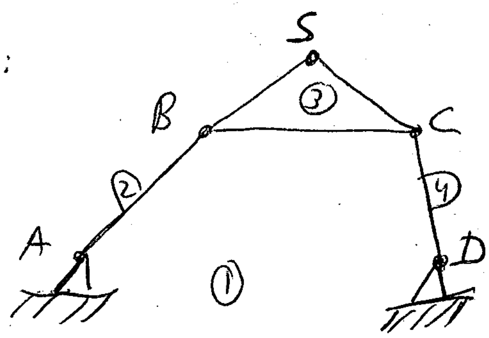

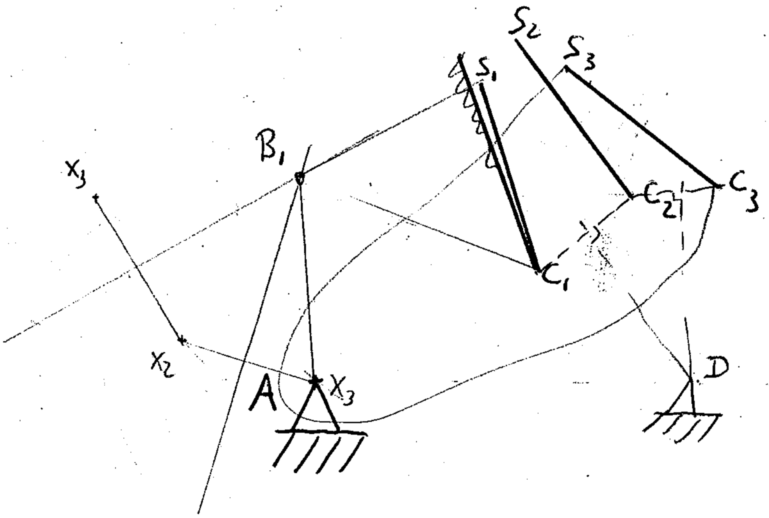

STEP ① - JOINT D

STEP ② - $\overline{X_3 B_3}$ = const (= r_2)

STEP ③ $\overline{X_2 B_2}$ = const (= r_2)

STEP ④ DRAW X_2, X_3 AT LINK ~~B~~ X_1 S_1 C_1

STEP ⑤ THE CENTER OF THE CIRCLE THROUGH X_1 X_2 X_3 IS POINT B

VELOCITY ANALYSIS

VELOCITY OF A POINT

TRANSLATORY VELOCITY, $\underline{v}$

VELOCITY OF A LINK

THE POINTS OF A LINK MAY HAVE DIFFERENT VELOCITIES!

IT MAY BE SEEN AS A MOVING COORDINATE SYSTEM WITH ANGULAR VELOCITY $\underline{\Omega}$

ANGULAR VELOCITY:

FOR PLANAR MECHANISM, $\underline{\Omega} = \omega \hat{z}$

$$[\omega] = \left[\frac{rad}{s}\right] \text{ OR } [RPM] \text{ OR } \left[\frac{deg}{s}\right] \text{ OR } \left[\frac{rev}{s}\right] \xleftarrow{} Hz$$

$$2\pi\left[\frac{rad}{s}\right] = 60\,[RPM] = 360\left[\frac{deg}{s}\right] = 1\,[Hz]$$

IN A STATIONARY SYSTEM, $\underline{\omega} = 0$

$$\underline{v} = \frac{d\underline{r}}{dt}$$

$$\Delta \underline{r} = \int \underline{v}\, dt$$

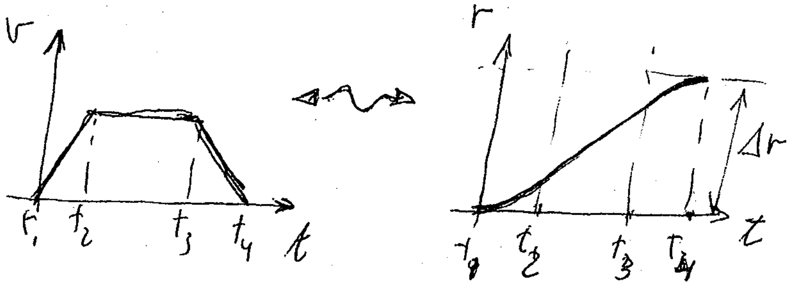

VELOCITY ANALYSIS

$$\underline{v} = \frac{d\underline{r}}{dt} = \frac{\partial \underline{r}}{\partial t} + \underline{\Omega} \times \underline{r}$$

{ DERIVATE OF A VECTOR IN A ROTATING COORDINATE SYSTEM

$\underline{r}$ - A POSITION VECTOR AS SEEN FROM A ROTATING COORDINATE SYSTEM, AT $\underline{\Omega}$

$\hat{x}, \hat{y}, \hat{z}$ → STATIONARY COORDINATE SYSTEM

$\hat{x}', \hat{y}', \hat{z}'$ or $\hat{x}'', \hat{y}'', \hat{z}''$, ... → ROTATING COORDINATE SYSTEM

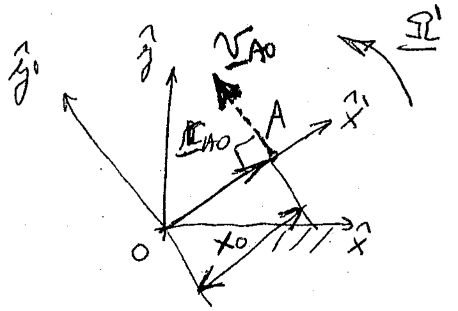

LETS ASSUME

$$\underline{\Omega}' = \omega \hat{z} \; (= \omega \hat{z}') \qquad [\omega] = \left[\frac{rad}{s}\right]$$

$$\underline{r} = x_0 \hat{x}'$$

(x_0 = CONSTANT)

$$\underline{v}_{AO} = \underline{v}_A = \frac{\partial \underline{r}_{AO}}{\partial t} + \underline{\Omega}' \times \underline{r}_{AO}$$

$$\underline{v}_{AO} = \underbrace{\frac{\partial}{\partial t}(x_0 \hat{x}')}_{0} + \begin{vmatrix} \hat{x}' & \hat{y}' & \hat{z}' \\ 0 & 0 & \omega \\ x_0 & 0 & 0 \end{vmatrix}$$

$$\boxed{\underline{v}_{AO} = \omega x_0 \hat{y}'}$$

$\underline{v}_{AO}$ in 90° to $\underline{r}_{AO}$

6-3

RELATIVE VELOCITY IN A LINK

$\underline{\Omega}' = \omega \hat{z}'$

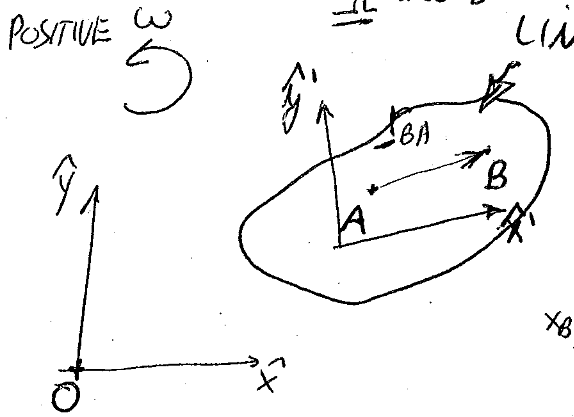

$$\underline{r}_{BA} = (x_B - x_A)\hat{x}' + (y_B - y_A)\hat{y}'$$

$$\underline{v}_{BA} = \frac{\partial \underline{r}_{BA}}{\partial t} + \underline{\Omega}' \times \underline{r}_{BA}$$

x_B, x_A, y_B, y_B CONSTANTS IN RELATION TO $\hat{x}'\hat{y}'\hat{z}'$ SO $\frac{\partial \underline{r}_{BA}}{\partial t} = 0$

BY DEFINTTION, THE RESULT OF $\underline{\Omega}' \times \underline{r}_{BA}$ IS AVECTOR PERPENDICULAR TO $\underline{\Omega}'$ AND ALSO PERPENDICULAR TO $\underline{r}_{BA}$

CONCLUSIONS

① THE RELATIVE VELOCITY BETWEEN TWO POINTS IN A RIGID LINK IS ALWAYS PERPENDICULAR TO THE LINE ~~THAT~~ BETWEEN THE TWO POINTS

② THE RELATIVE VELOCITY BETWEEN TWO POINTS IN THE DIRECTION OF THE LINE THAT CONNECTS THE TWO POINTS IS ZERO (RIGID BODY ⟷ THE POINTS CANNOT SEPARATE)

PROVE (2A) THE VELOCITY OF TWO POINTS IN THE DIRECTION OF THE LINE THAT CONNECTS THEM IS EQUAL

$$\underline{v}_{BA} = \underline{\Omega}' \times \underline{r}_{BA} = \begin{vmatrix} \hat{x}' & \hat{y}' & \hat{z}' \\ 0 & 0 & \omega \\ (x_B - x_A) & (y_B - y_A) & 0 \end{vmatrix} = \begin{matrix} -\omega(y_B - y_A)\hat{x}' \\ \omega(x_B - x_A)\hat{y}' \end{matrix}$$

SCALAR MULT.

$\underline{a} \cdot \underline{b} = \cos\theta$ ← FROM LINEAR ALGEBRA

$$\underline{r}_{BA} \cdot \underline{v}_{BA} = (x_B - x_A)(-\omega)(y_B - y_A) + (y_B - y_A)(\omega)(x_B - x_A) = 0 = \underline{\underline{\cos\frac{\pi}{2}}}$$

6-4

RELATIVE VELOCITY METHOD

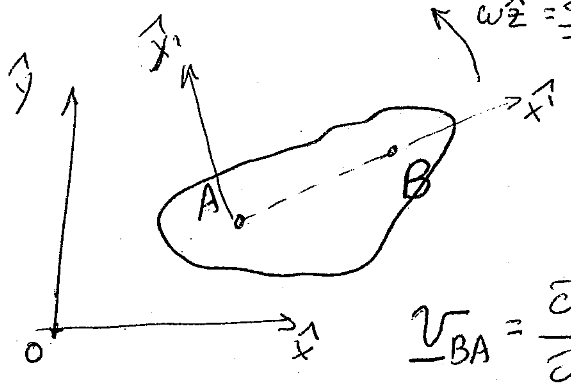

$$\underline{v}_B = \underline{v}_{B0} = \underline{v}_A + \underline{v}_{BA}$$

$$\underline{v}_{BA} = \frac{\partial \underline{r}_{BA}}{\partial t} + \underline{\Omega}' \times \underline{r}_{BA}$$

$$\underline{r}_{BA} = \overline{AB}\,\hat{x}$$

$$v_{BA} = \dots\ \omega \cdot \overline{AB}\,\hat{y}'$$

$$\boxed{\underline{v}_B = \underline{v}_A + \underbrace{\omega \cdot \overline{AB}\,\hat{y}'}_{\underline{v}_{BA}}}$$

EXAMPLE

GIVEN ω_2, θ_2, THE GEOMETRY $\omega_2 = +1\ \frac{rad}{s}$ ↺

FIND THE ANGULAR VELOCITY OF LINK 3

AND THE VELOCITY OF POINT C (LINK 4) $\theta_2 = 100°$

$\overline{AB} = 170mm$

$\overline{BC} = 820mm$

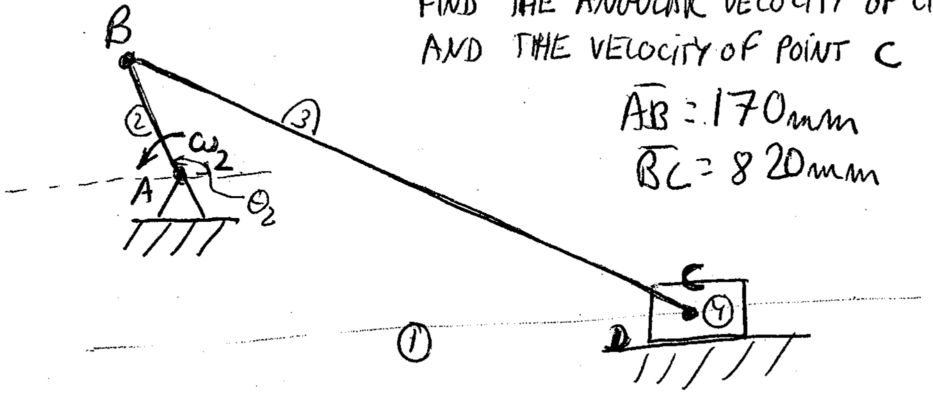

6-5

$\underline{v}_B = \underline{v}_{BA}$ = KNOWN

$\underline{v}_C = \underline{v}_B + \underline{v}_{CB}$ ← LOOKING AT LINK 3

↑ DIRECTION KNOWN (SLIDER)

↑ KNOWN (FROM LINK 2)

↑ DIRECTION KNOWN

LINK 2: (LINK 3) $|\underline{v}_B| = \omega_2 \overline{AB} = 1 \cdot 170 = 0.17 \ \text{m/s}$

DIRECTION OF $\underline{v}_B$ ↙ 100 = ∠190°

$$\boxed{\underline{v}_B = 0.17 \ \text{m/s} \ \angle 190^\circ}$$

$$\boxed{\underline{v}_C = v_C \leftrightarrow}$$

$|\underline{v}_{CB}| = \omega_3 \overset{2}{\cdot} \overline{BC}$ ↗ ← PERPENDICULAR TO BC

SEE ALSO EXAMPLE 6.6 (2nd Ed. 6.3) IN THE BOOK

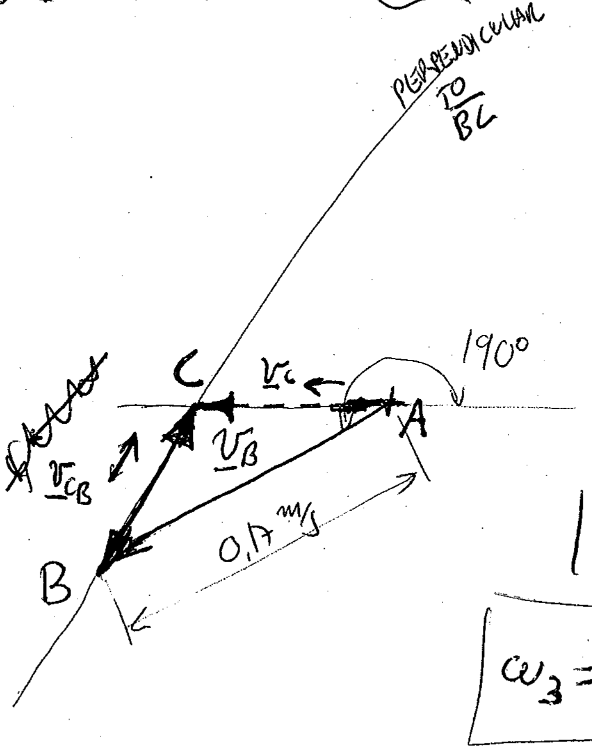

$$\boxed{|\underline{v}_C| = 0.095 \ \text{m/s}}$$

$|\underline{v}_{CB}| = 0.1 \ \text{m/s} = \omega_3 \cdot \overset{\overline{BC}}{0.82} \ \text{m}$

$$\boxed{\omega_3 = \frac{0.1}{0.82} = 0.122 \ \frac{\text{rad}}{\text{s}}}$$ ⊕

6-6

COINCIDENT POINTS ON DIFFERENT LINKS

IN SOME MECHANISMS, ~~THERE ARE~~ MAY BE SOME POINTS THAT GEOMETRICALLY ARE COINCIDENT AT THE GIVEN MOMENT, BUT MAY HAVE DIFFERENT VELOCITY.

FOR EXAMPLE: THE FOOT PUMP

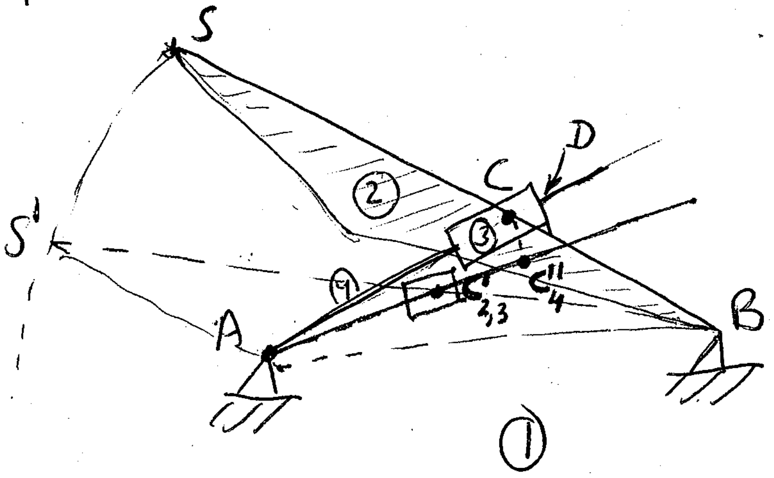

POINT C BELONGS TO LINKS #3 & #2 BUT ~~NOT~~ DOESN'T MOVE ~~[illegible]~~ WITH LINK 4

$$\underline{v}_{C_{2,3}} = \underline{v}_{C_{2,3}B} = \omega_2 \overline{C_{2,3}B} \ \swarrow\!\!\!\nearrow$$

$$\underline{v}_{C_4} = \underline{v}_{C_4A} = \omega_4 \overline{C_4A} \ \updownarrow$$

$$\underline{v}_{C_4} = \underline{v}_{C_{2,3}} + \underline{v}_{C_4 C_{2,3}}$$

SLIDING VELOCITY BETWEEN LINKS 3 AND 4 (THE BOTH HAVE THE SAME ANGULAR VELOCITY)

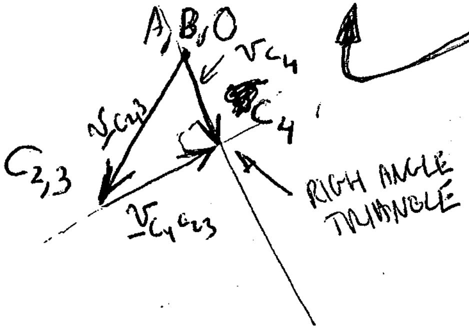

6-7

EXAMPLE

3rd Ed: FROM PROBLEM 4-24 (2nd Ed: 4-53)

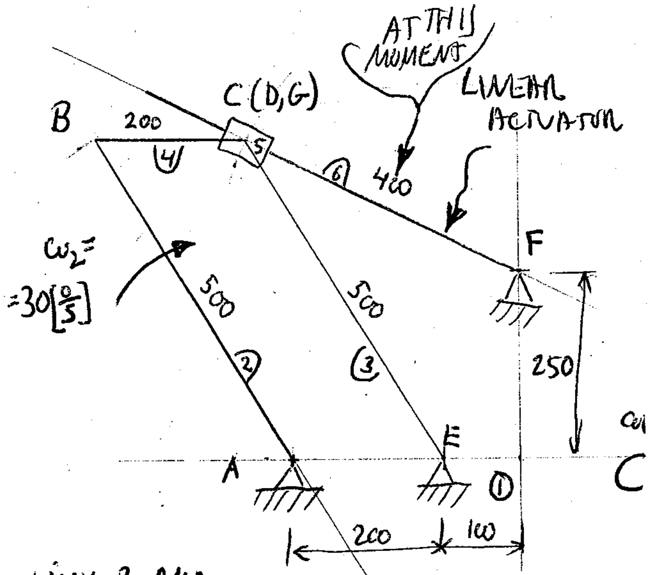

GIVEN ω_2 AND THE GEOMETRY:

~~LINEAR REL~~

RETRACTING VELOCITY OF THE LINEAR ACTUATOR – ?

[mm] $|\underline{V}_{C_5 C_6'}|$ – ?

TEMPORARY COINCIDENT → C_6 – BELONGS TO LINK 6

$C = C_3, C_4, C_5$ – BELONGS TO LINKS 3, 4 & 5

LINK 2 ANALYSIS

$$\omega_2 = 30\frac{°}{s} = \left(\frac{\pi}{180}\cdot 30\right)\frac{rad}{s} = 0.5236\frac{rad}{s}$$

$$|\underline{V}_{BA}| = |\underline{V}_B| = \omega_2 \cdot \overline{AB} = 0.5236\cdot 0.5 = 0.2618 \frac{m}{s}$$

LINK 4 ANALYSIS

$$\underline{V}_B = \underline{V}_C + \underline{V}_{CB}$$

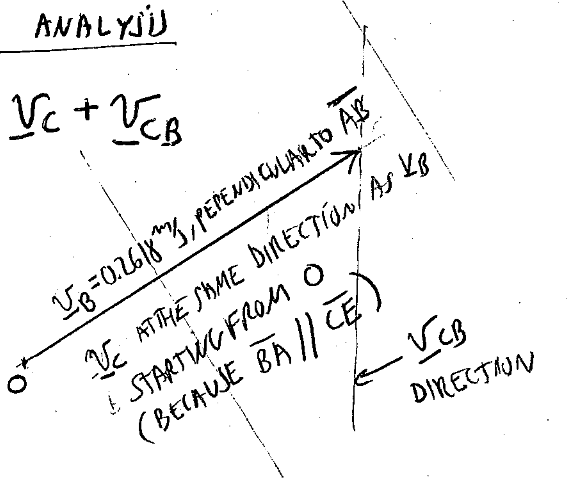

$\underline{V}_B = 0.2618 \frac{m}{s}$, PERPENDICULAR TO $\overline{AB}$

$\underline{V}_C$ AT THE SAME DIRECTION AS $\underline{V}_B$ & STARTING FROM O (BECAUSE $\overline{BA} \parallel \overline{CE}$)

$\underline{V}_{CB}$ DIRECTION

⇝ $|\underline{V}_{CB}| = 0 = \omega_4 \cdot \overline{BC}$

$\omega_4 = 0$

$\underline{V}_C = \underline{V}_B = 0.2618 \frac{m}{s}$ A ⊥ B

LINKS 5, 6 ANALYSIS

$$\underline{V}_C = \underline{V}_{C_5} = \underline{V}_{C_6} + \underline{V}_{C_5 C_6}$$

$$\underline{V}_{C_6} \equiv \underline{V}_{C_6 F} = \cancel{\underline{V}_F}^{\,0} + \underbrace{\underline{\omega}_6 \times \overline{CF}}_{\text{PERPENDICULAR TO } \overline{CF}}$$

$\underline{V}_{C_5 C_6}$ – IN THE SLIDER DIRECTION (CONSTRAIN)

6-8

SCALE: 1 mm $= 5\cdot10^{-3}$ m/s

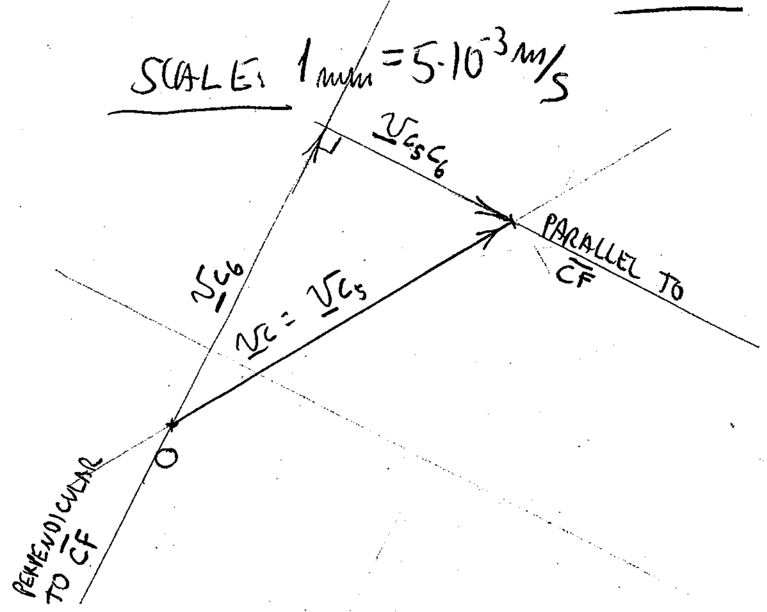

$$\underline{v}_{C_5C_6} = \underset{(mm)}{27.5} \cdot 5\cdot10^{-3} \left[\frac{m/s}{mm}\right]$$

$$\underline{v}_{C_6C_5} = 0.138 \text{ m/s}$$

(EXACT SOLUTION: 0.14 m/s
USING TRIGONOMETRICS:)

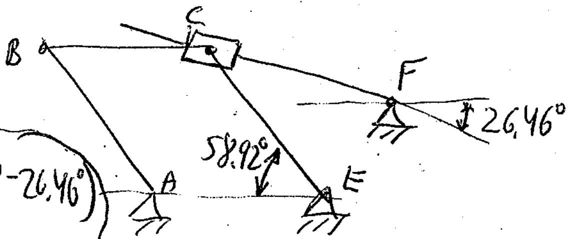

$$|\underline{v}_{C_5C_6}| = |\underline{v}_C| \sin(58.92° - 26.46°)$$

$$= 0.2618 \tfrac{m}{s} \cdot 0.5367$$

$$= 0.1405 \text{ m/s}$$

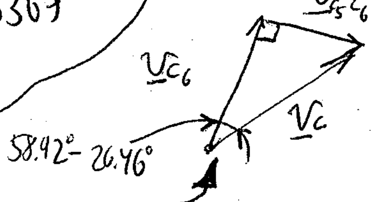

A SIMILAR PROBLEM - SEE "EXAMPLE PROBLEM ~~EX.~~ 6-8" — 3rd Ed.
(EX. PROBLEM 6.5 ON 2nd Ed.)

6-9

VELOCITY IMAGE OF A MECHANISM

$m=6$
$j_p=7$
$j_h=0$
} DOF = 1

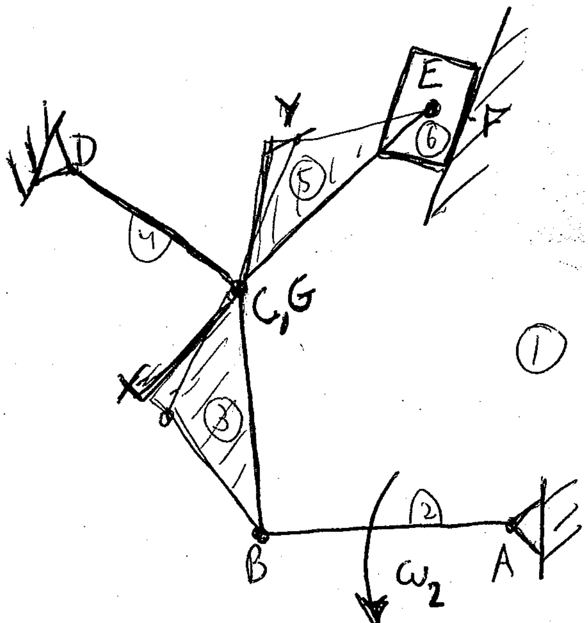

FULL GEOMETRY GIVEN AT THE SPECIFIC MOMENT

ω_2 GIVEN

ST 1 ~~PERPENDICULAR AB~~

$\underline{v}_B = \omega_2 \cdot \overline{AB}$ PERPENDICULAR TO $\overline{AB}$

ST 2

$\underline{v}_C = \underline{v}_B + \underline{v}_{CB}$

ST4 ST5

$\underline{v}_E = \underline{v}_C + \underline{v}_{EC}$

$\underline{v}_Y = v_E + \underline{v}_{YE}$ ← ST6

$\underline{v}_Y = \underline{v}_C + \underline{v}_{YC}$ ← ST7

FLOATING POINTS

$\underline{v}_X = \underline{v}_B + \underline{v}_{XB}$ ST8

$\underline{v}_X = \underline{v}_C + \underline{v}_{XC}$ ST9

X, Y = GENERAL POINTS ON A FLOATING LINK

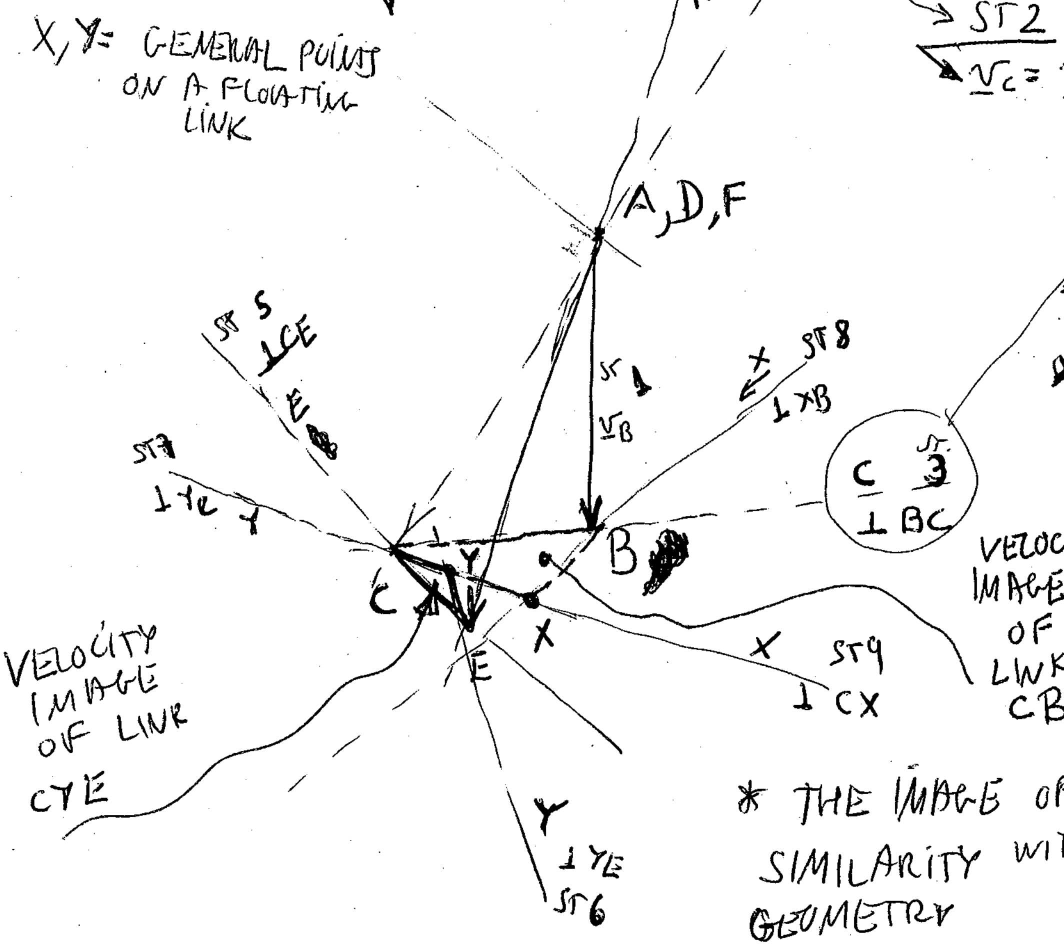

* THE IMAGE OF A LINK HAS SIMILARITY WITH THE IMAGE GEOMETRY

FIND THE VELOCITY OF X, OF Y, $\underline{v}_{XY}$!, $\underline{v}_{XE}$

<u>VELOCITY IMAGE</u> - Example

The geometry of the following mechanism is given (all the dimensions needed to draw its temporary position are given), as well as the angular velocity of link 2. Draw the velocity image of the mechanism.

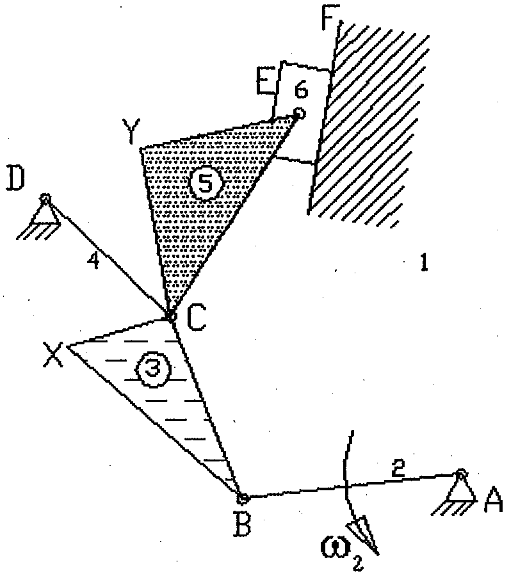

(n=6, jp=7, jh=0; DOF=1)

$$\underline{v}_B = \underline{v}_{BA} = \omega_2 \cdot \overline{AB} \angle \perp \overline{AB}$$

$$\underline{v}_C = \underline{v}_B + \underline{v}_{CB} \quad \begin{cases} \underline{v}_C = v_c \angle \perp \overline{CD} \\ \underline{v}_{CB} = v_{CB} \angle \perp \overline{CB} \\ \underline{v}_B = \text{known} \end{cases}$$

$$\underline{v}_E = \underline{v}_C + \underline{v}_{EC} \quad \begin{cases} \underline{v}_E = v_E \angle \text{Parallel to } \overline{F} \\ \underline{v}_{EC} = v_{EC} \angle \perp \overline{EC} \\ \underline{v}_C = \text{known} \end{cases}$$

Floating points X, Y:

$$\left.\begin{matrix} \underline{v}_X = \underline{v}_B + \underline{v}_{XB} \\ \underline{v}_X = \underline{v}_C + \underline{v}_{XC} \end{matrix}\right\} \begin{cases} \underline{v}_{XB} = v_{XB} \angle \perp \overline{XB} \\ \underline{v}_{XC} = v_{XC} \angle \perp \overline{XC} \\ \underline{v}_B = \text{known} \\ \underline{v}_C = \text{known} \end{cases}$$

$$\left.\begin{matrix} \underline{v}_Y = \underline{v}_E + \underline{v}_{YE} \\ \underline{v}_Y = \underline{v}_C + \underline{v}_{YC} \end{matrix}\right\} \begin{cases} \underline{v}_{YE} = v_{YE} \angle \perp \overline{YE} \\ \underline{v}_{YC} = v_{YC} \angle \perp \overline{YC} \\ \underline{v}_E = \text{known} \\ \underline{v}_C = \text{known} \end{cases}$$

<u>Scale: 1 mm = ? m/s</u>

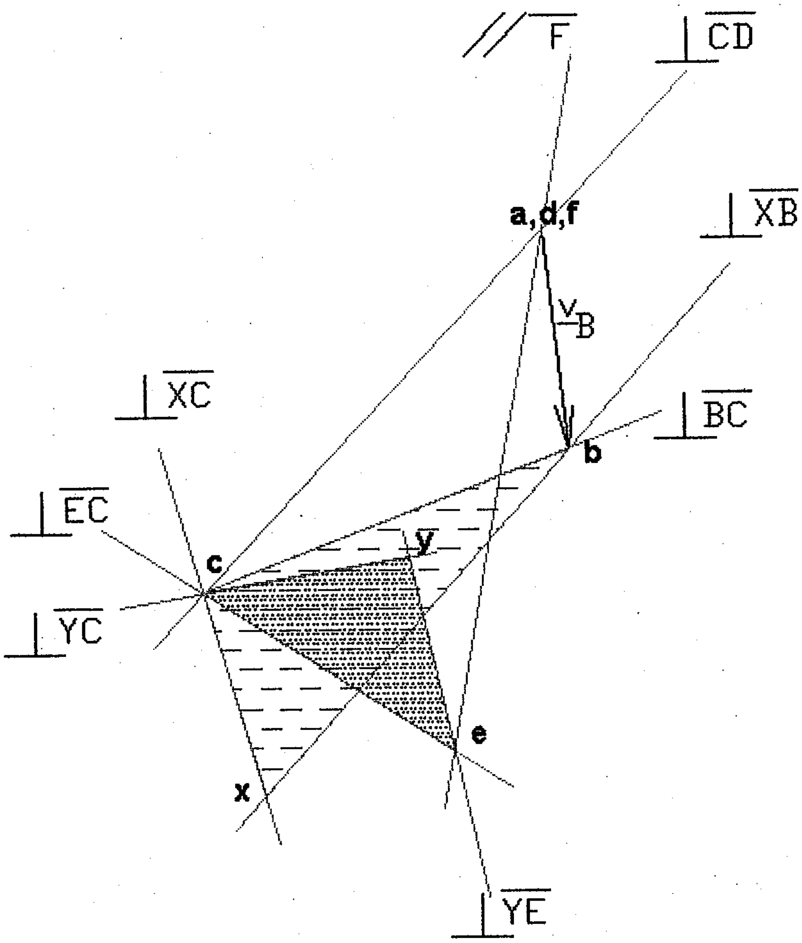

Velocity Image construction

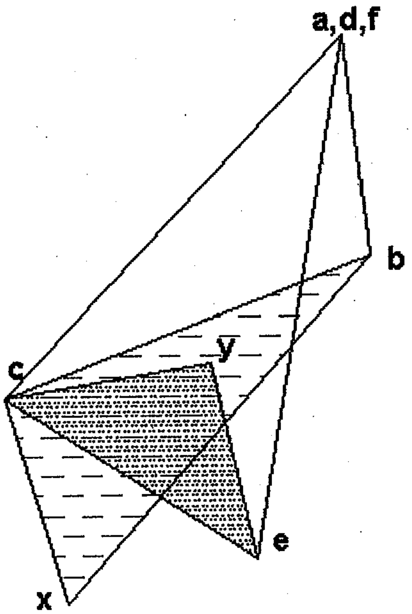

$\longrightarrow \rightarrow \hat{x}$

The triangle Δbcx is called the velocity image of link 3. The triangle Δcey is called the velocity image of link 5.
The above velocity image of the mechanism is proportional to $|\underline{v}_B|$, so the different velocities may be expressed as a factor of $|\underline{v}_B|$
Measurements taken from the mechanism's velocity image:

$${}^{\overline{dc}}\!/_{ab} = 2.25 \quad \text{then} \quad v_C = 2.25 \cdot |\underline{v}_B| = \omega_4 \cdot \overline{CD} \;\rightarrow\; \omega_4 = {}^{v_C}\!/_{\overline{CD}}$$

$${}^{\overline{bc}}\!/_{ab} = 1.78 \quad \text{then} \quad v_{CB} = 1.78 \cdot |\underline{v}_B| = \omega_3 \cdot \overline{CB} \;\rightarrow\; \omega_3 = {}^{v_{CB}}\!/_{\overline{CB}}$$

$${}^{\overline{ef}}\!/_{ab} = 2.39 \quad \text{then} \quad v_E = 2.39 \cdot |\underline{v}_B|$$

$${}^{\overline{ec}}\!/_{ab} = 1.34 \quad \text{then} \quad v_{EC} = 1.34 \cdot |\underline{v}_B| = \omega_5 \cdot \overline{EC} \;\rightarrow\; \omega_5 = {}^{v_{EC}}\!/_{\overline{EC}}$$

For the floating points X, Y:

$${}^{\overline{ax}}\!/_{ab} = 2.85 \quad \text{then} \quad \underline{v}_X = 2.85 \cdot |\underline{v}_B| \angle 243.6^\circ$$

$${}^{\overline{dy}}\!/_{ab} = 1.6 \quad \text{then} \quad \underline{v}_Y = 1.6 \cdot |\underline{v}_B| \angle 247.5^\circ$$

What is the relative velocity between point X and pin join E?

$${}^{\overline{ex}}\!/_{ab} = 0.877 \quad \text{then} \quad \underline{v}_{EX} = 0.877 \cdot |\underline{v}_B| \angle 13.1^\circ$$

Find a zero-velocity point on link 3
A static point must be coincident with point a (d or f).

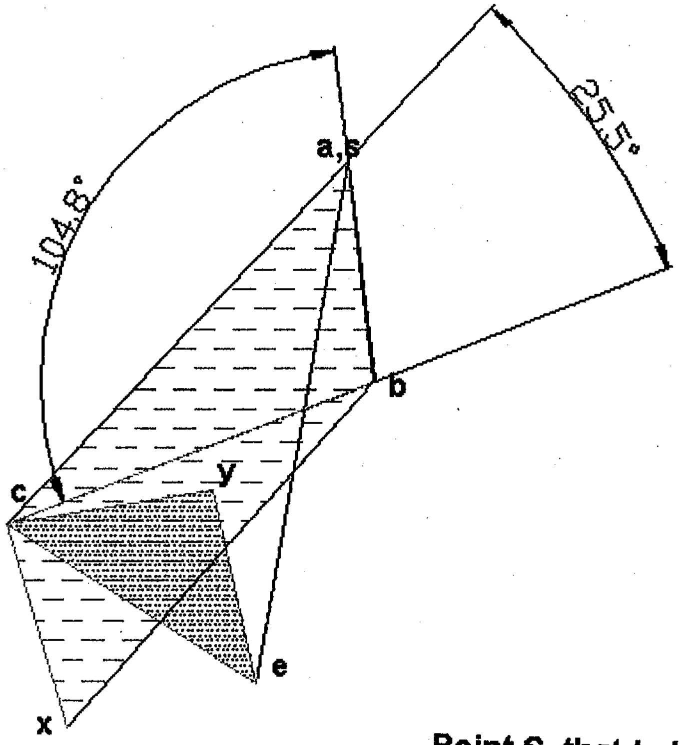

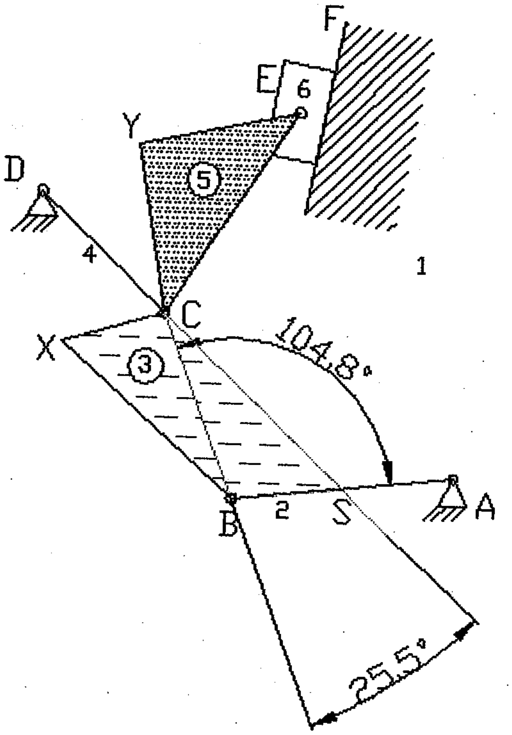

Point S, that belongs to link 3, has v=0
In other words, S is the temporary center of rotation of link 3
For example, $\underline{v}_X = \cancel{\underline{v}}_S + \underline{v}_{XS} = \omega_3 \cdot \overline{XS} \angle \perp \overline{XS}$

Analytical Solution

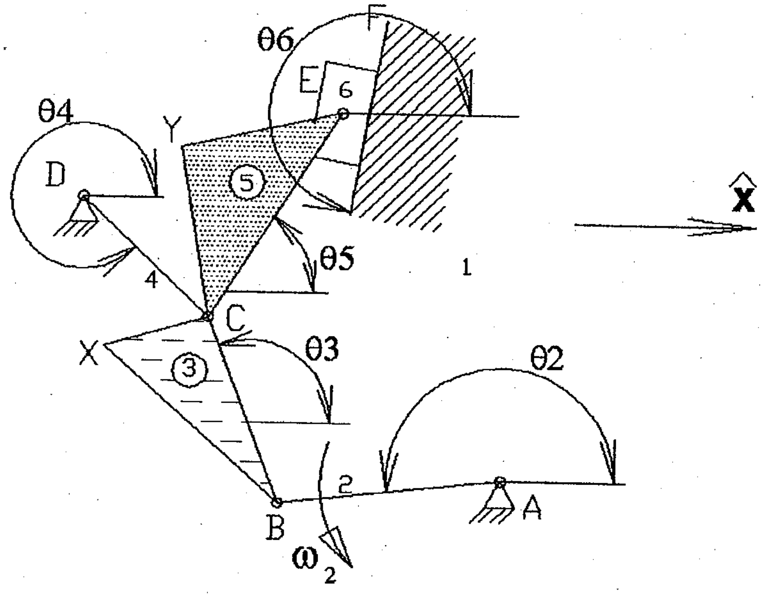

Links 1, 2, 3, 4 solution

$$\underline{r}_{DA} + \underline{r}_{CD} = \underline{r}_{BA} + \underline{r}_{CB}$$

$$\underline{r}_{DA} + \overline{CD}\cdot(\cos\theta_4\hat{x}+\sin\theta_4\hat{y}) = \overline{AB}\cdot(\cos\theta_2\hat{x}+\sin\theta_2\hat{y})+\overline{BC}\cdot(\cos\theta_3\hat{x}+\sin\theta_3\hat{y})$$

$$\dot{\underline{r}}_{DA} + \dot{\underline{r}}_{CD} = \dot{\underline{r}}_{BA} + \dot{\underline{r}}_{CB};\ \boxed{\underline{v}_C = \underline{v}_B + \underline{v}_{CB}}$$

$$\overline{CD}\cdot\dot{\theta}_4\cdot(-\sin\theta_4\hat{x}+\cos\theta_4\hat{y}) = \overline{AB}\cdot\dot{\theta}_2\cdot(-\sin\theta_2\hat{x}+\cos\theta_2\hat{y})+\overline{BC}\cdot\dot{\theta}_3\cdot(-\sin\theta_3\hat{x}+\cos\theta_3\hat{y})$$

$$\omega_4 = \dot{\theta}_4;\quad \omega_2 = \dot{\theta}_2;\quad \omega_3 = \dot{\theta}_3;\quad v_C = \overline{CD}\cdot\omega_4;\quad v_B = \overline{AB}\cdot\omega_2;\quad v_{CB} = \overline{BC}\cdot\omega_3$$

$$\begin{bmatrix} -\sin\theta_4 & \sin\theta_3 \\ \cos\theta_4 & -\cos\theta_3 \end{bmatrix}\cdot\begin{bmatrix} v_C \\ v_{CB} \end{bmatrix} = \begin{bmatrix} -\sin\theta_2 \\ \cos\theta_2 \end{bmatrix}\cdot v_B$$

$$\begin{bmatrix} v_C \\ v_{CB} \end{bmatrix} = \begin{bmatrix} -\sin\theta_4 & \sin\theta_3 \\ \cos\theta_4 & -\cos\theta_3 \end{bmatrix}^{-1}\cdot\begin{bmatrix} -\sin\theta_2 \\ \cos\theta_2 \end{bmatrix}\cdot v_B$$

$$\underline{v}_C = v_C\cdot(-\sin\theta_4\hat{x}+\cos\theta_4\hat{y});\quad \omega_4 = {}^{v_C}\!/_{\overline{CD}}$$

$$\underline{v}_{CB} = v_{CB}\cdot(-\sin\theta_3\hat{x}+\cos\theta_3\hat{y});\quad \omega_3 = {}^{v_{CB}}\!/_{\overline{BC}}$$

Links 1, 4, 5, 6 Solution

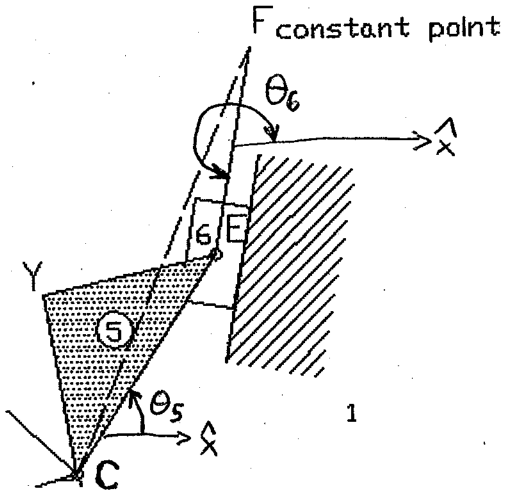

$$\underline{r}_{EF} = \underline{r}_{CF} + \underline{r}_{EC}$$

$$r_{EF} \cdot (\cos\theta_6 \hat{x} + \sin\theta_6 \hat{y}) = \underline{r}_{CF} + \overline{CE} \cdot (\cos\theta_5 \,\hat{x} + \sin\theta_5 \,\hat{y})$$

$$\underline{\dot{r}}_{EF} = \underline{\dot{r}}_{CF} + \underline{\dot{r}}_{EC}; \ \boxed{\underline{v}_E = \underline{v}_C + \underline{v}_{EC}}$$

$$\dot{r}_{EF} \cdot (\cos\theta_6 \hat{x} + \sin\theta_6 \hat{y}) = v_C \cdot (-\sin\theta_4 \hat{x} + \cos\theta_4 \hat{y}) + \overline{CE} \cdot \dot{\theta}_5 \cdot (-\sin\theta_5 \,\hat{x} + \cos\theta_5 \,\hat{y})$$

$$\omega_5 = \dot{\theta}_5; \quad v_E = \dot{r}_{EF}; \quad v_{EC} = \overline{CE} \cdot \omega_5$$

$$\begin{bmatrix} \cos\theta_6 & \sin\theta_5 \\ \sin\theta_6 & -\cos\theta_5 \end{bmatrix} \cdot \begin{bmatrix} v_E \\ v_{EC} \end{bmatrix} = \begin{bmatrix} -\sin\theta_4 \\ \cos\theta_4 \end{bmatrix} \cdot v_C$$

$$\begin{bmatrix} v_E \\ v_{EC} \end{bmatrix} = \begin{bmatrix} \cos\theta_6 & \sin\theta_5 \\ \sin\theta_6 & -\cos\theta_5 \end{bmatrix}^{-1} \cdot \begin{bmatrix} -\sin\theta_4 \\ \cos\theta_4 \end{bmatrix} \cdot v_C$$

$$\underline{v}_E = v_E \cdot (\cos\theta_6 \hat{x} + \sin\theta_6 \hat{y})$$

$$\underline{v}_{EC} = v_{EC} \cdot (-\sin\theta_5 \,\hat{x} + \cos\theta_5 \,\hat{y}); \quad \omega_5 = {}^{v_{EC}}\!/_{\overline{CE}}$$

Velocity of the point of interest X on link 3:

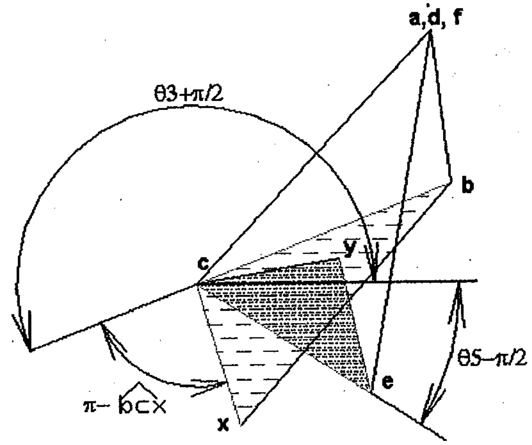

$$ {}^{v_{XC}}\!/_{v_{CB}} = {}^{\overline{XC}}\!/_{\overline{BC}} \quad \rightarrow \quad \underline{v}_{XC} = |v_{CB}| \cdot {}^{\overline{XC}}\!/_{\overline{BC}} \ \angle\left(\theta_3 + {}^{\pi}\!/_{2} + \pi - \angle BCX\right)$$

$$ {}^{v_{XB}}\!/_{v_{CB}} = {}^{\overline{XB}}\!/_{\overline{BC}} \quad \rightarrow \quad \underline{v}_{XB} = |v_{CB}| \cdot {}^{\overline{XB}}\!/_{\overline{BC}} \ \angle\left(\theta_3 + {}^{\pi}\!/_{2} + \angle CBX\right)$$

In order to calculate the velocity of X:

In order to calculate the velocity of X:

$$\underline{v}_X = \underline{v}_B + \underline{v}_{XB} = \ldots$$

$$\underline{v}_X' = \left(-v_B \cdot \sin\theta_2 + \left|v_{CB}\right| \cdot \left(\overline{XB}/\overline{BC}\right) \cdot \cos\left(\theta_3 + \pi/2 + \angle CBX\right)\right) \cdot \hat{x} +$$

$$+\left(v_B \cdot \cos\theta_2 + \left|v_{CB}\right| \cdot \left(\overline{XB}/\overline{BC}\right) \cdot \sin\left(\theta_3 + \pi/2 + \angle CBX\right)\right) \cdot \hat{y}$$

Velocity of the point of interest Y on link 5:

$$v_{YC}/v_{CE} = \overline{YC}/\overline{CE} \quad \rightarrow \quad \underline{v}_{YC} = \left|v_{CE}\right| \cdot \overline{YC}/\overline{CE} \ \angle\left(\theta_5 - \pi/2 + \angle YCE\right)$$

In order to calculate the velocity of Y:

$$\underline{v}_Y = \underline{v}_C + \underline{v}_{YC} = \ldots$$

$$\underline{v}_Y = \left(-v_C \cdot \sin\theta_4 + \left|v_{CE}\right| \cdot \left(\overline{YC}/\overline{CE}\right) \cdot \cos\left(\theta_5 - \pi/2 + \angle YCE\right)\right) \cdot \hat{x} +$$

$$+\left(v_C \cdot \cos\theta_4 + \left|v_{CE}\right| \cdot \left(\overline{YC}/\overline{CE}\right) \cdot \sin\left(\theta_5 - \pi/2 + \angle YCE\right)\right) \cdot \hat{y}$$

Using Excel to solve the above equations:

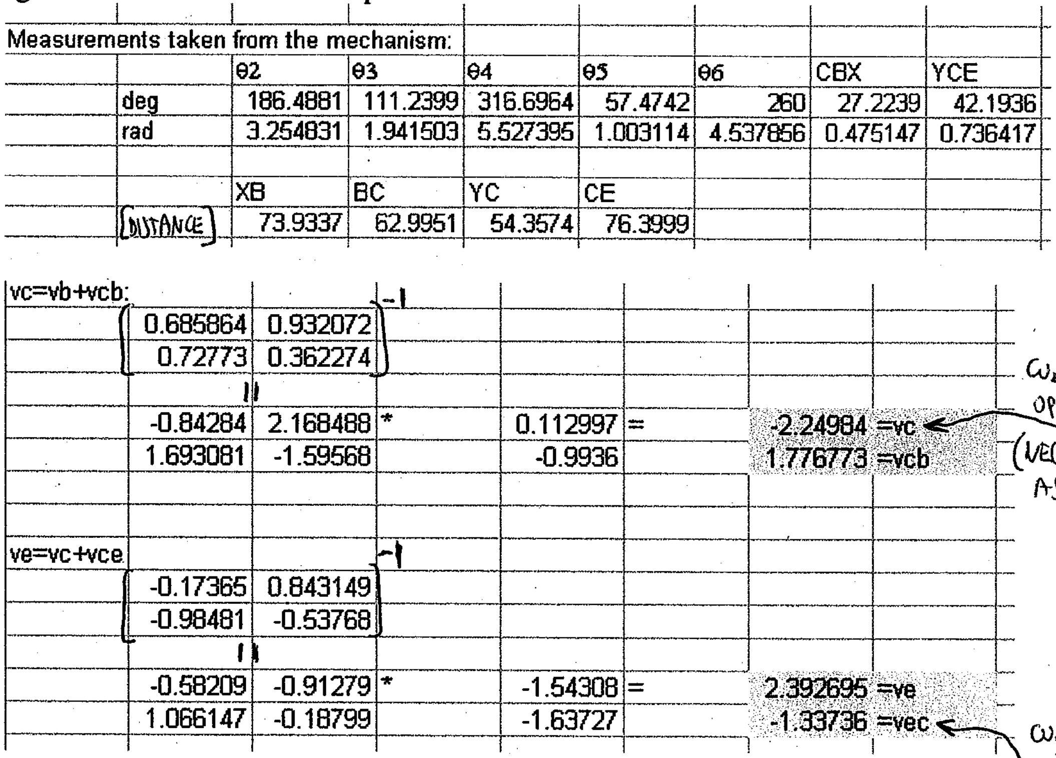

Measurements taken from the mechanism:

	θ2	θ3	θ4	θ5	θ6	CBX	YCE
deg	186.4881	111.2399	316.6964	57.4742	260	27.2239	42.1936
rad	3.254831	1.941503	5.527395	1.003114	4.537856	0.475147	0.736417
	XB	BC	YC	CE			
DISTANCE	73.9337	62.9951	54.3574	76.3999			

vc=vb+vcb:			-1			
	0.685864	0.932072				
	0.72773	0.362274				
	‖					
	-0.84284	2.168488	*	0.112997	=	-2.24984 =vc
	1.693081	-1.59568		-0.9936		1.776773 =vcb
ve=vc+vce			-1			
	-0.17365	0.843149				
	-0.98481	-0.53768				
	‖					
	-0.58209	-0.91279	*	-1.54308	=	2.392695 =ve
	1.066147	-0.18799		-1.63727		-1.33736 =vec

ω_4 AT THE OPPOSITE DIRECTION (NEGATIVE TO THE ASSUMED)

ω_5 AT THE OPPOSITE DIRECTION (NEGATIVE TO THE ASSUMED)

	x	y	magnitude
vb	0	0	
	0.112997	-0.9936	1
ve	0	0	
	-0.41549	-2.35634	2.392695
vc	0	0	
	-1.54308	-1.63727	2.249837
vcb	0	0	
	-1.65608	-0.64368	1.776773
vec	0	0	
	1.127595	-0.71907	1.337361
vxb	0	0	
	-1.38274	-1.56092	2.085295
vyc	0	0	
	0.937999	0.159793	0.951513
vx	0	0	
	-1.26975	-2.55452	2.852685
vy	0	0	
	-0.60508	-1.47748	1.596582

(ABSOLUTE VALUE)

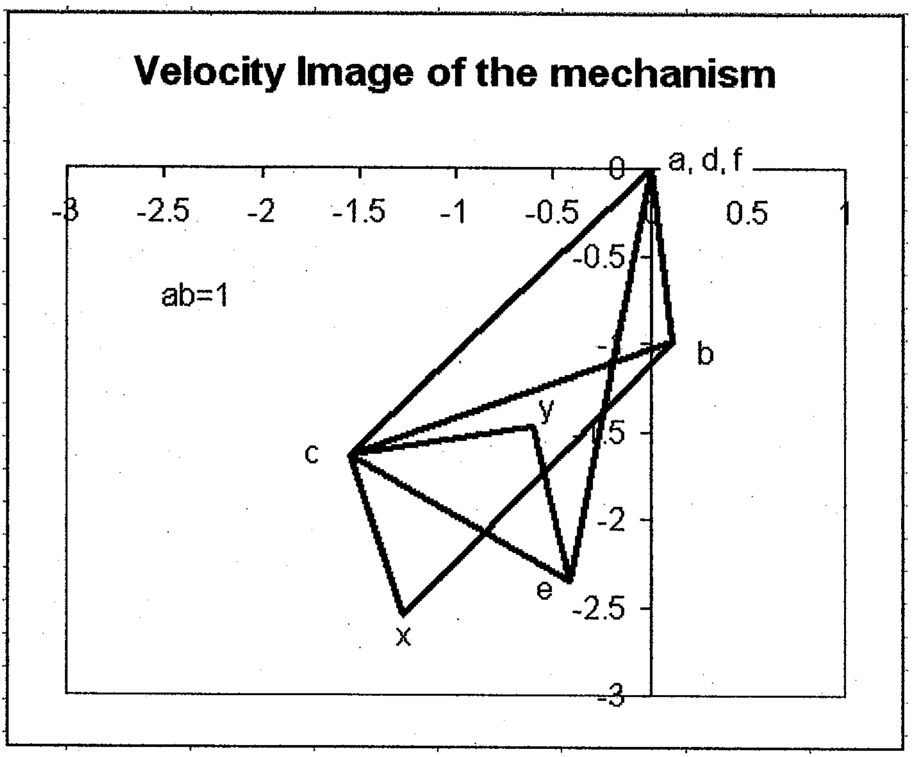
Velocity Image of the mechanism

$\overline{AB}, \overline{CD}, \omega_2 \rightarrow v_B, \omega_3, \omega_4, \omega_5$

6-10

FIND THE DIFFERENT ANGULAR VELOCITIES:

$$\omega_3 = \frac{|\underline{v}_{CB}|}{\overline{CB}}$$

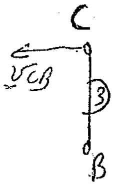

= (+) $\left(= \frac{|\underline{v}_{XC}|}{\overline{XC}} = \frac{\underline{v}_{XB}}{\overline{XB}} \right)$

THE VELOCITY IMAGE OF THE LINK HAS SIMILARITY TO THE KINEMATIC DIAGRAM SHAPE!

$$\omega_4 = \frac{|\underline{v}_C|}{\overline{CD}}$$

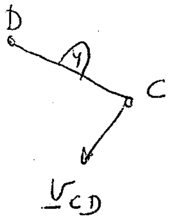

= (−)

$$\omega_5 = \frac{|\underline{v}_{CE}|}{\overline{CE}}$$

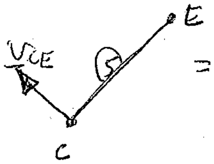

= (−) $\left(= \frac{|\underline{v}_{YC}|}{\overline{YC}} = \frac{|\underline{v}_{YE}|}{\overline{YE}} \right)$

INSTANTANEOUS CENTER OF ROTATION

① A LINK IN ROTATION AND TRANSLATION HAS ALWAYS A CENTER OF ROTATION (TEMPORARY OR CONSTANT)

(A POINT WITH VELOCITY 0)

LETS PROVE IT FOR THE 2D CAS

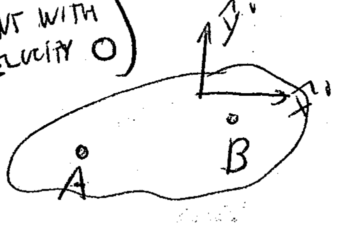

x', y' ATTACHED TO THE LINK

$$\underline{v}_B = \underline{v}_A + \underline{v}_{BA}$$

$$0 = \underline{v}_A + \underline{\omega} \times \underline{r}_{BA}$$

$$\left.\begin{aligned} \underline{v}_A &= v_{Ax}\hat{x}' + v_{Ay}\hat{y}' \\ \underline{r}_{BA} &= r_{BAx}\hat{x}' + r_{BAy}\hat{y}' \\ \underline{\omega} &= \omega\hat{z}' \end{aligned}\right\} 0 = v_{Ax}\hat{x}' + v_{Ay}\hat{y}' + \begin{vmatrix} \hat{x}' & \hat{y}' & \hat{z}' \\ 0 & 0 & \omega \\ r_{BAx} & r_{BAy} & 0 \end{vmatrix}$$

$$v_{Ax} - r_{BAy}\cdot\omega = 0 \rightarrow r_{BAy} = \frac{v_{Ax}}{\omega}$$

$$v_{Ay} + r_{BAx}\cdot\omega = 0 \rightarrow r_{BAx} = \frac{-v_{Ay}}{\omega}$$

FOR $v_{Ax} = v_{Ay} = 0$ ⇝ A IS THE CENTER OF ROTATION ($r_{BAy} = r_{BAx} = 0$)

FOR $v_{Ay} = 0$ ⇝ $\underline{r}_{BA} = \frac{v_{Ax}}{\omega}\hat{y}'\cancel{\hat{x}'}$

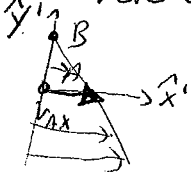

FOR $\omega = 0$, $\underline{v}_A \neq 0$ } NO ROTATION, NO CENTER OF ROTATION

6-11

CONCLUSION 2 ⤳
" 3 ⤳ THE VELOCITY OF TWO POINTS IN THE DIRECTION OF TH LINE BETWEEN THEM, IS EQU

② THE VELOCITY OF A POINT IN A LINK, IN THE DIRECTION OF THE LINE BETWEEN THE POINT AND THE CENTER OF ROTATION, IS ZERO

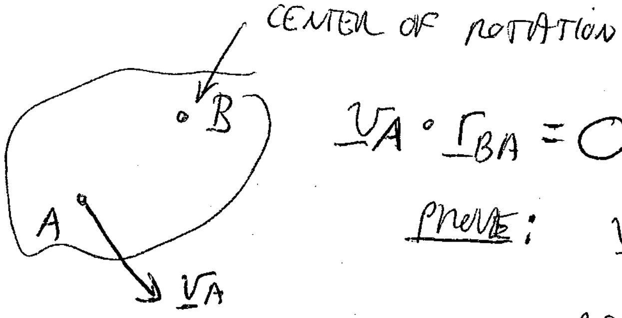

$$\underline{V}_A \circ \underline{r}_{BA} = 0$$

PROVE: $\underline{V}_A = \cancel{\underline{V}_B}^{\,0} + \underline{\omega} \times \underline{r}_{AB}$

$\underline{V}_A$ IS PERPENDICULAR TO $\underline{\omega}$ ($\hat{z}'$) AND TO $\overline{AB}$
SO THERE IS NO COMPONENT OF $\underline{V}_A$ ON $\overline{AB}$

OR

$$\underline{V}_A = V_{Ax}\hat{x}' + V_{Ay}\hat{y}'$$
$$\underline{r}_{BA} = \frac{-V_{Ay}}{\omega}\hat{x}' + \frac{V_{Ax}}{\omega}\hat{y}'$$

$$\underline{V}_A \cdot \underline{r}_{BA} = -\frac{V_{Ax}V_{Ay}}{\omega} + \frac{V_{Ax}V_{Ay}}{\omega} = 0 \checkmark$$

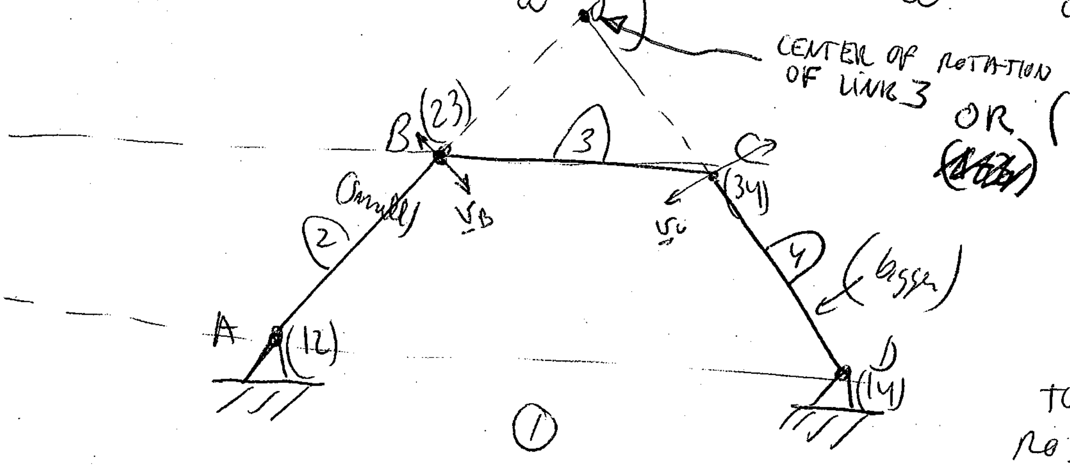

CENTER OF ROTATION OF LINK 3 OR (13) ~~(1??)~~

BECAUSE IT HAS THE SAME VELOCITY WITH THE FRAM

4)

TOTAL CENTERS OF ROTATION = 5

$$= \frac{n(n-1)}{2} = \frac{4(3)}{2} = 6$$

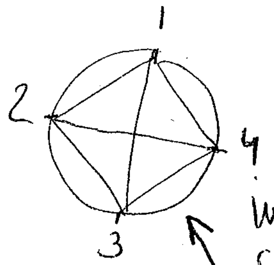

INSTANT CENTER DIAGRAM

(13), (23), (12) → LINE

~~(12), (14), (24) → LINE~~

(14), (34), (13) → LINE

(24) - ?

~~(34) (23) (24) → LINE~~

6-12

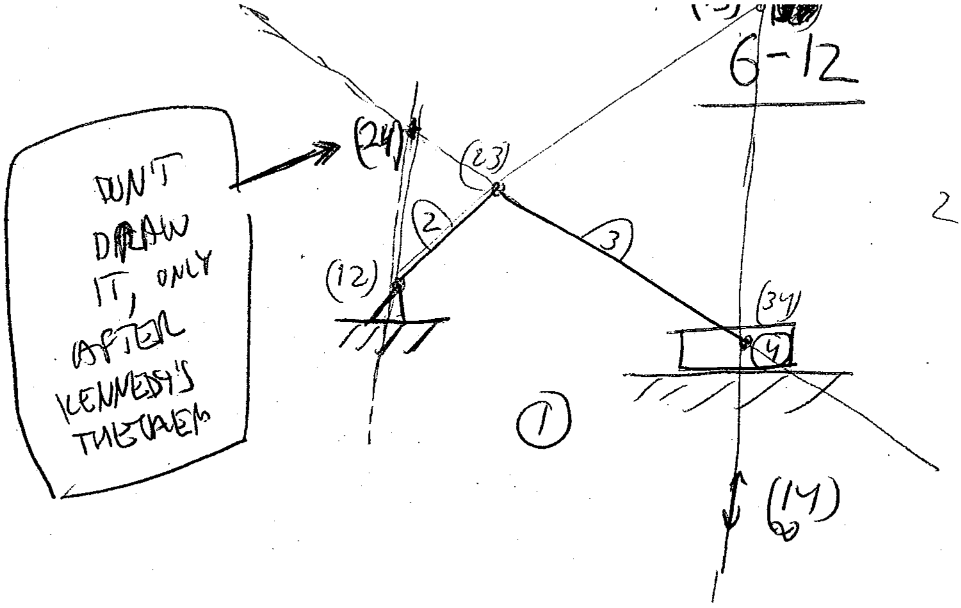

DON'T DRAW IT, ONLY AFTER KENNEDY'S THEOREM

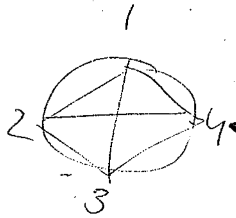

INSTANT CENTER DIAGRAM

∞ (14)

(14),(13),(34) → STRAIGHT LINE

~~(34)~~,

(12),(23),(13) → " "

WHERE IS (24)?

PRIMARY CENTERS

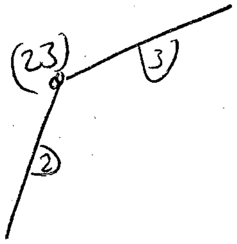

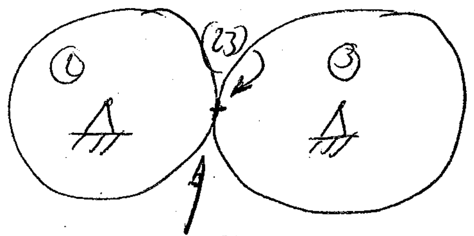

NO SLIDING
(GEARS OR FRICTION CONNECTION)

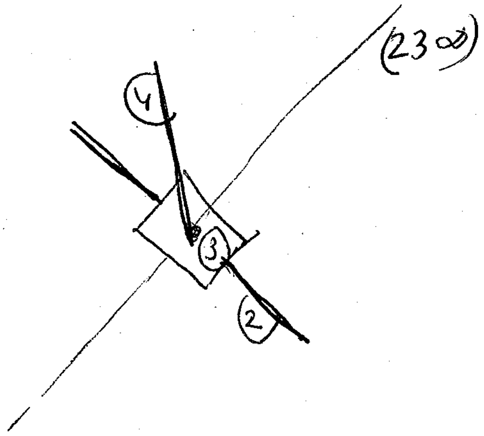

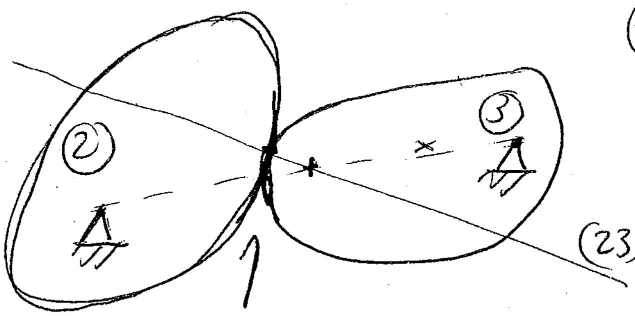

(23) ALONG THE COMMON NORMAL

SLIDING CONTACT

6-13

KENNEDY'S THEOREM (KENNEDY - ARONHOLDT)

IN A PLANAR MOTION MECHANISM,
"THE THREE INSTANT CENTERS CORRESPONDING WITH ANY THREE BODIES ALL LIE ON THE SAME STRAIGHT LINE"

GO BACK TO THE CRANK - SLIDER MECH, AND FIND (24)

QUICK PROVE

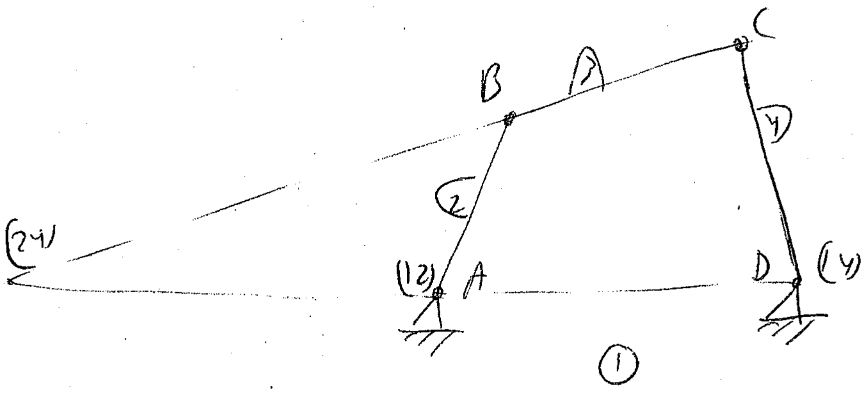

$$v_{(24)-(12)} = v_{(24)-(14)}$$

$$\underline{\omega}_2 \times \underline{r}_{(24)-(12)} = \underline{\omega}_4 \times \underline{r}_{(24)-(14)}$$

$\underline{\omega_2} \parallel \underline{\omega_4}$ (PLANAR MOTION)

SO $\underline{r}_{(24)-(12)} \parallel \underline{r}_{(24)-(14)}$

(24) COINCIDENT POINT, SO

$\underline{r}_{(24)-(12)}$ AND $\underline{r}_{(24)-(14)}$ IN THE SAME LINE

THE NUMBER OF INSTANT CENTERS IS GIVEN BY $= \frac{m(m-1)}{2}$

m = NUMBER OF LINKS

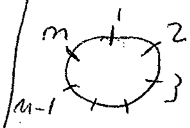

$(12)\ (13) \dots (1m) \} (m-1)$ CENTER

$(23)\ (24) \dots (2m \} (m-2)$

$\vdots$

$((m-1), m)$ $\quad 1$

OF CENTERS $= (m-1) + (m-2) + \dots + 1$

IT IS AN ARITHMETIC SERIES IN WHICH: ~~number~~ of SEQUENCES: $N = m-1$

THE FIRST NUMBER $a_1 = m-1$
THE LAST " $a_m = 1$

$$\Sigma = \frac{1}{2} N(a_1 + a_m) = \frac{1}{2}(m-1)(m-1+1) = \frac{(m-1)m}{2}$$ ✓

THE MEANING OF INSTANT CENTER

① THE INSTANTANEOUS CENTER OF ROTATION BETWEEN 2 LINKS

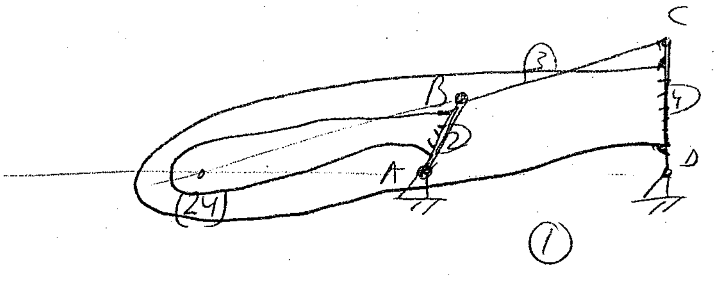

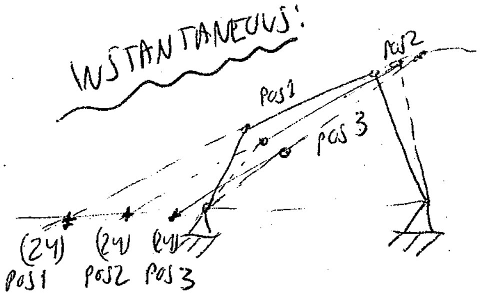

② ~~W~~ AN INSTANTANEOUS PIN JOIN ~~would~~ MAY BE POSITIONED ON POINT OF INTERST (24), COINCIDENT TO LINKS 2 & 4 AT THIS SPECIFIC MOMENT

③ POINT (24) HAS THE SAME VELOCITY ON LINK 2 AND ON LINK 4

AFTER NEXT SLIDE !!

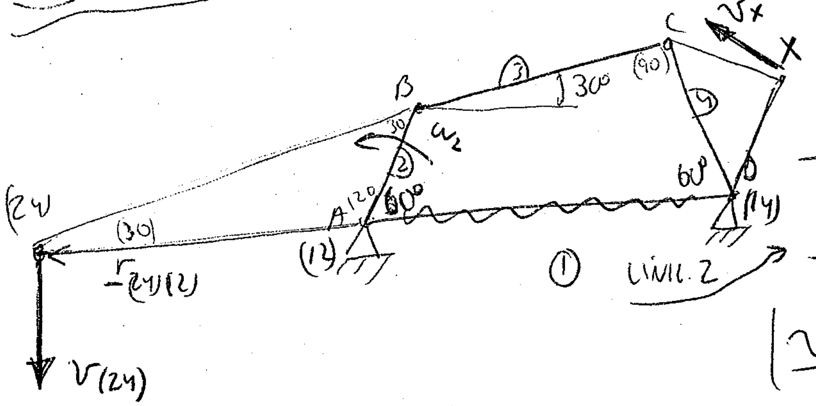

ω_2 GIVEN

GEOMETRY GIVEN

ω_4 -?, $\underline{V}x$ -?

LINK 2 → $\underline{v}_{(24)} = \underline{v}_{(24)(12)} = \underline{\omega}_2 \times \underline{r}_{(24)(12)} + \cancel{\underline{v}_{(12)}}^{\,0}$

$$|\underline{v}_{(24)}| = v_{(24)} = \omega_2 \cdot \overline{(24)(12)}$$

LINK 4 → $\underline{v}_{24} = \underline{v}_{(24)(14)} = \underline{\omega}_4 \times r_{(24)(14)} + \cancel{\underline{v}_{(14)}}^{\,0}$

$$|\underline{v}_{24}| = v_{(24)} = \omega_4 \cdot \overline{(24)(14)}$$

$$\boxed{\omega_4 = \omega_2 \frac{\overline{(24)(12)}}{\overline{(24)(14)}} \circlearrowleft +}$$

$$\underline{v}_x = \overline{DX} \cdot \omega_4 \quad \angle \perp \overline{XD}$$

THREE LINKS ARE NEEDED TO SOLVE THE PROBLEM:

- THE LINK ~~[illegible]~~ HAVING THE KINEMATIC INFORMATION ($\omega_2^{LINK 2}$)
- THE LINK IN WHICH WE WANT TO CALCULATE VELOCITY
- THE FRAME

EXAMPLE ①

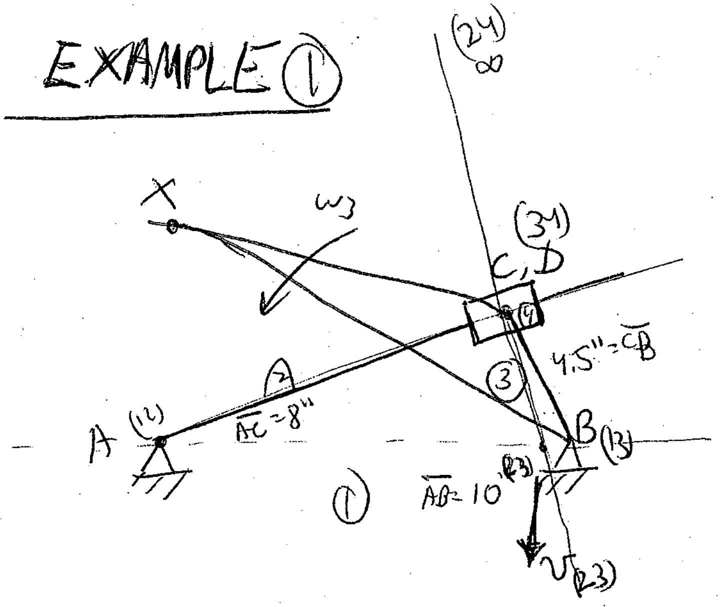

GIVEN: GEOMETRY, ω_3

CALCULATE ω_2

INPUT : LINK 3
OUPUT : LINK 2
REFERENCE : FRAME
} (12) (13) (23)

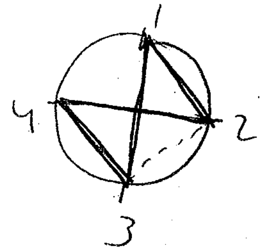

$$v_{(23)} = \omega_3 \cdot \overline{(23)(13)} = \\ = \omega_2 \cdot \overline{(23)(12)}$$

$$\omega_2 = \omega_3 \frac{\overline{(23)(13)}}{\overline{(23)(12)}}$$

MEASURE $\overline{(23)(13)}$, $\overline{(23)(12)}$ FROM KINEMATIC DRAWING $\omega_2 \approx 0.12\omega_3$ ↻

$\overline{(23)(13)} = 1.1$, $\overline{(23)(12)} = 8.9$

ANALYTICAL SOLUTION

$$\hat{CAB} = \cos^{-1}\left\{\frac{10^2+8^2-4.5^2}{2\cdot 10\cdot 8}\right\} = 26.05°$$

$$\overline{(12)(23)} = \frac{8}{\cos(\hat{CAB})} = 8.904$$

$$\overline{(23)(13)} = 10'' - (12)(23) = 1.096$$

$$\omega_2 = \omega_3 \cdot \frac{1.096}{8.904} = 0.123\,\omega_3 \ ↻$$

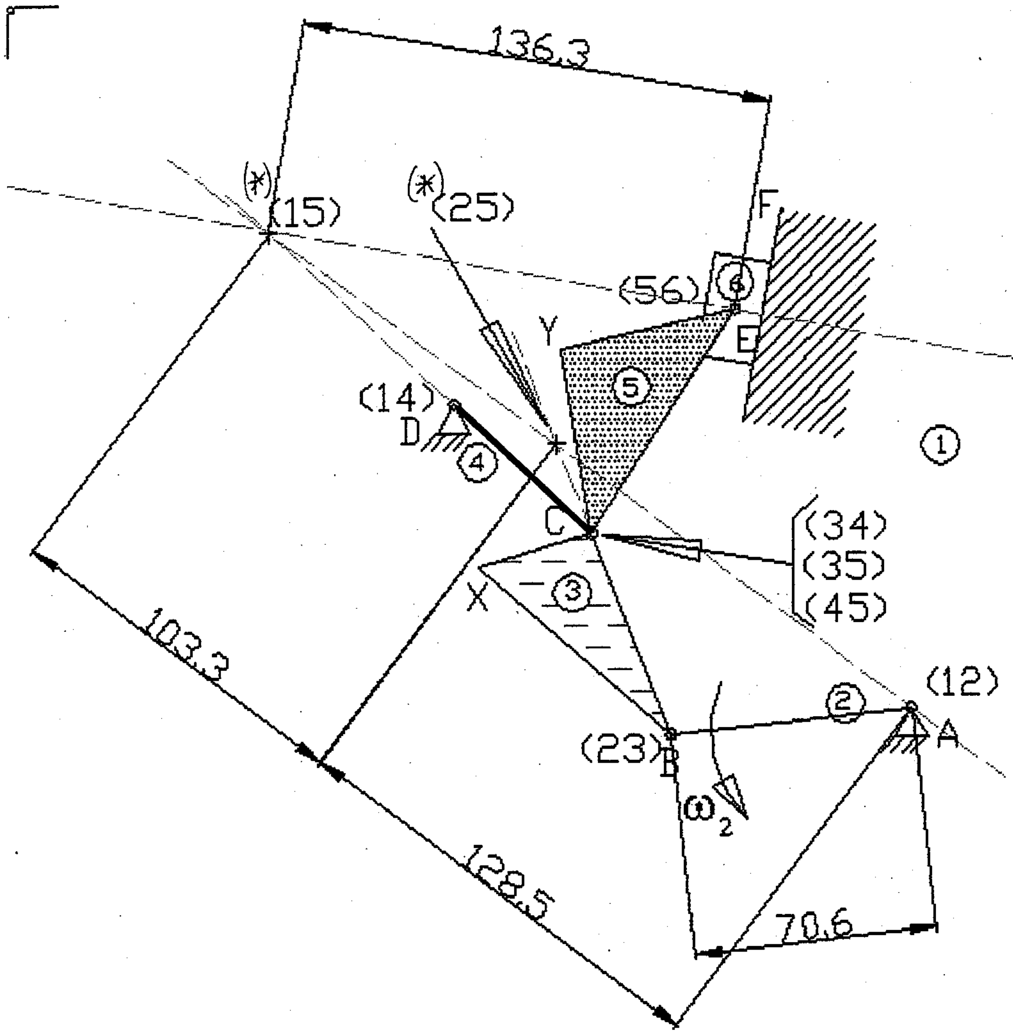

Geometry and vb are given
What is the velocity of point E?

Point E belongs to link 5 as well as to link 6
Lets solve it looking for the center of rotation between links 2 and 5 (it may be solved also between links 2 and 6). The relations with the frame are also needed: (12) and (15)

(12), (15), (25

OR

(12), (16), (2

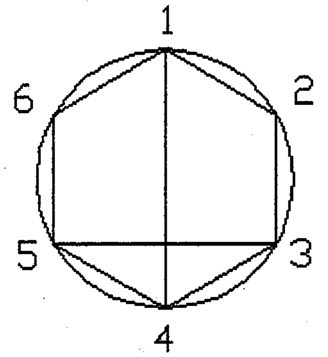

6*(6-1)/2=15

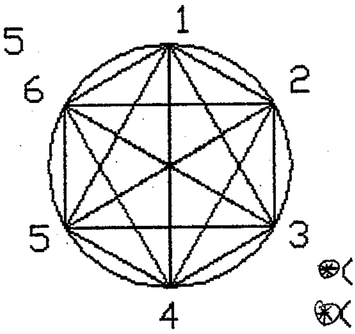

Sketch an Instant Center Diagram

Identify the primary Instant centers

Use Kennedy's Theorem to locate the others!

⊛(46) is the intersection of (56)-(45) and (14)-(16)
⊛(24) is the intersection of (14)-(12) and (23)-(34)
⊛(25) is the intersection of (24)-(45) and (15)-(12)
⊛(26) is the intersection of (24)-(46) and (25)-(56)
⊛(36) is the intersection of (26)-(23) and (13)-(16)

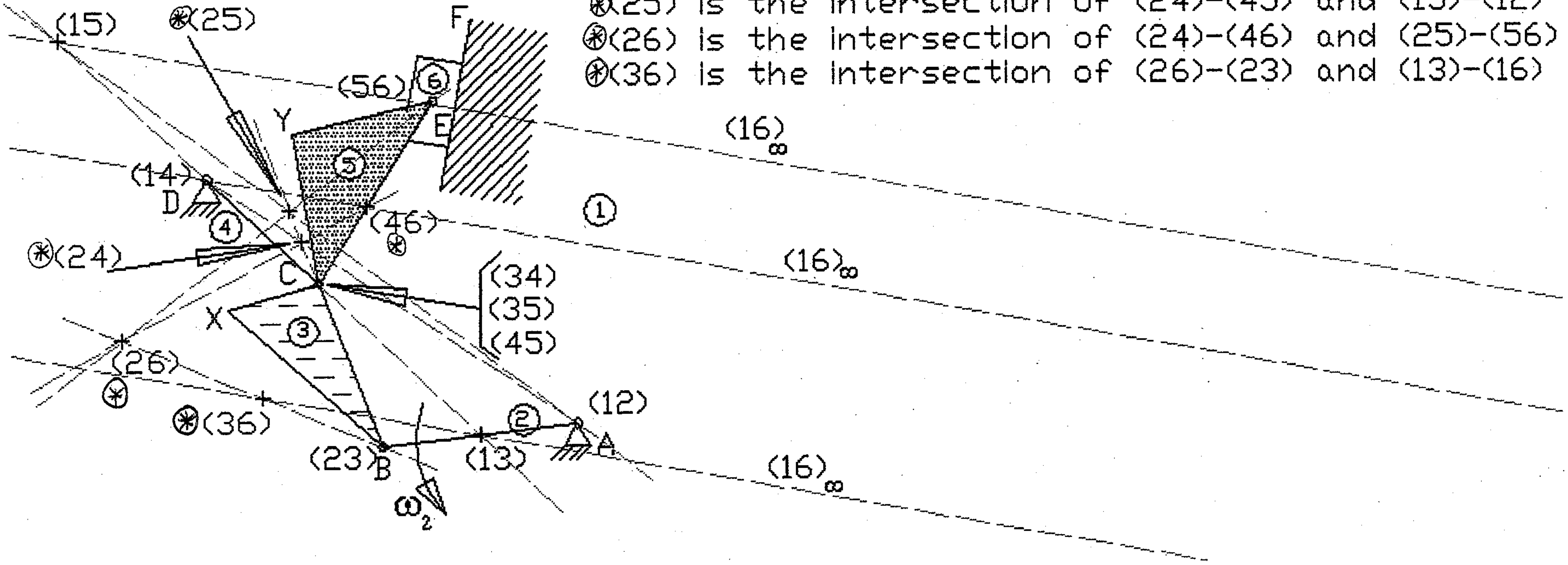

6*(6-1)/2=15

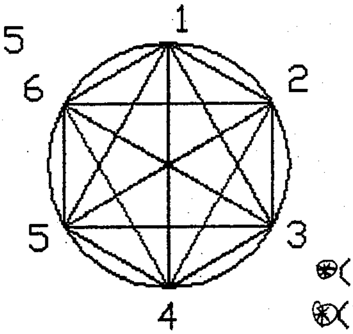

Sketch an Instant Center Diagram

Identify the primary Instant centers

Use Kennedy's Theorem to locate the others!

⊛(46) is the intersection of (56)-(45) and (14)-(16)
⊛(24) is the intersection of (14)-(12) and (23)-(34)
⊛(25) is the intersection of (24)-(45) and (15)-(12)
⊛(26) is the intersection of (24)-(46) and (25)-(56)
⊛(36) is the intersection of (26)-(23) and (13)-(16)

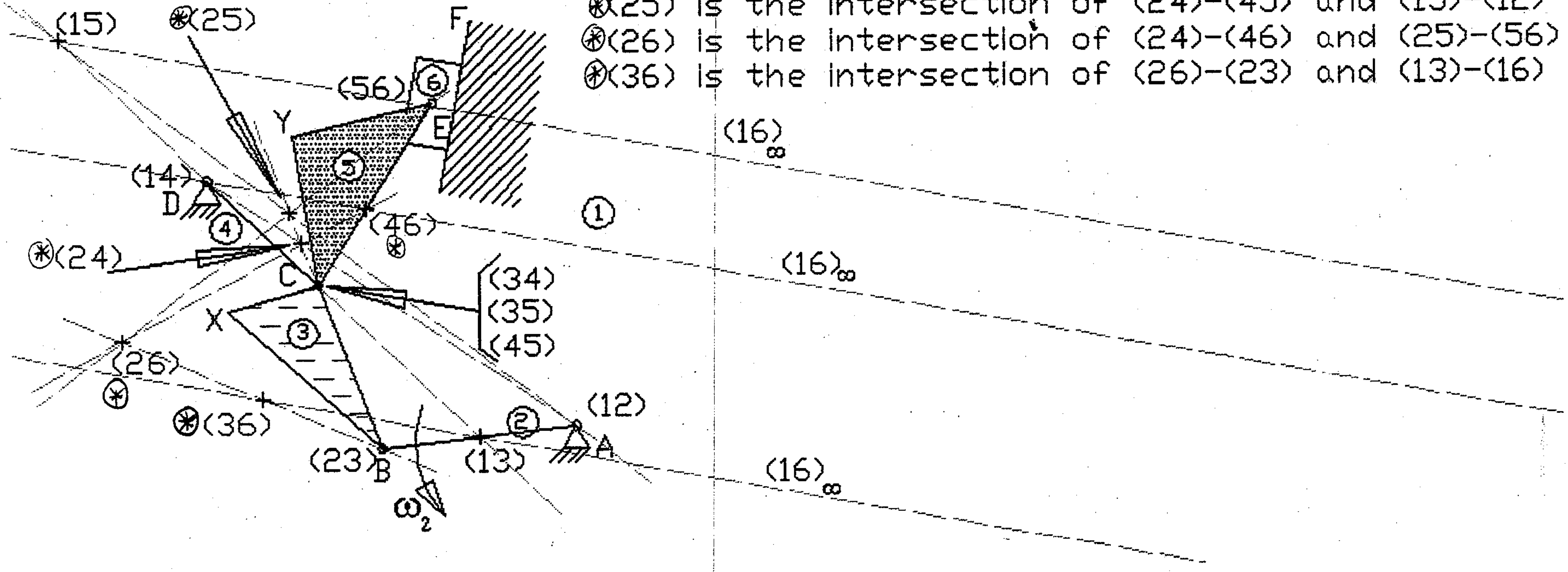

FINAL PROJECT - MECHANISM LIST

①

DS=1.6" DT=1.4"
ES=2.8" ET=2.1"

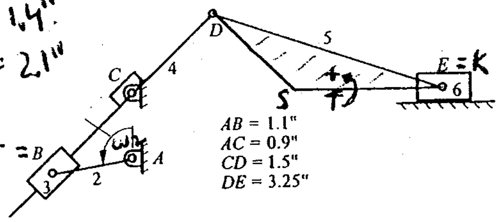

AB = 1.1"
AC = 0.9"
CD = 1.5"
DE = 3.25"

②

AC = 1.4"
AE = 3.15"
DF = 1.6"
BF = 1.25"
BD = 0.8"

TF=1.1"
TD=0.7"

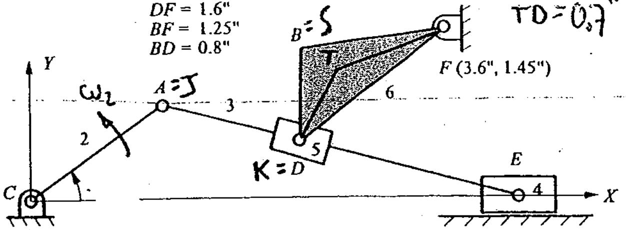

③

DA = 0.95"
DF = 2.45"
AB = 1.45"
BF = 1.8"

BE = 0.85"
EG = 2.2"
EC = 1.2"
CG = 1.25"

BT=1.2"
AT=0.73"

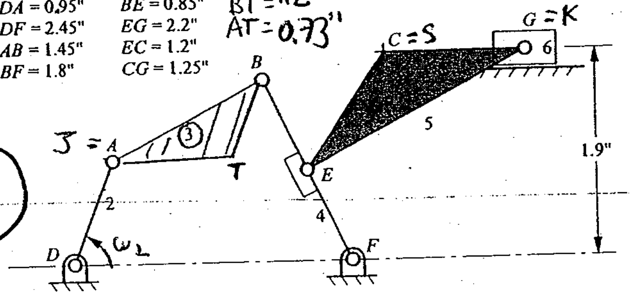

④

TE=1" SD=1.17"
SC=0.675"

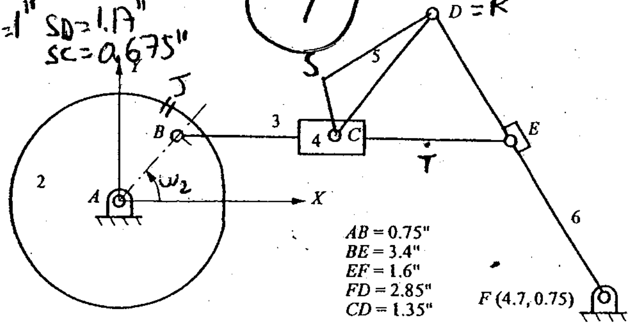

AB = 0.75"
BE = 3.4"
EF = 1.6"
FD = 2.85"
CD = 1.35"

⑤

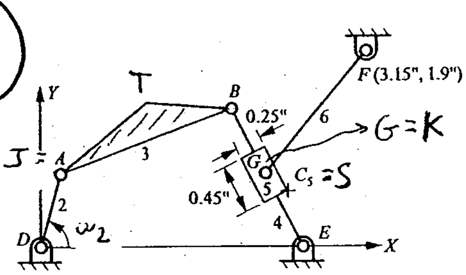

DE = 2.5"
AD = 0.75"
AB = 1.75"
BE = 1.5"
GF = 1.5"

AT=1.12"
BT=1.34"

⑥

SD=2"
SB=2"

AB = 1.75"
BC = 1"
BD = 3"
ED = 2.25"
CE = 1.45"

TB=1"
TA=1"

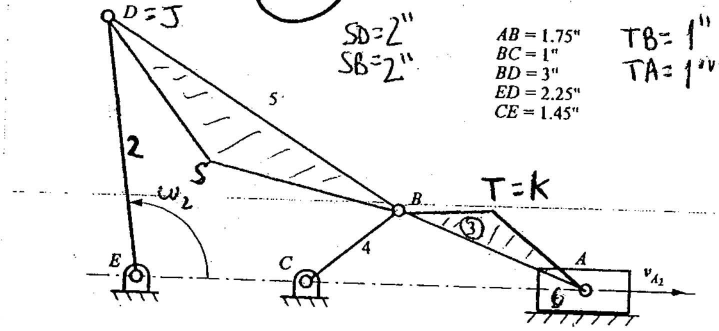

⑦

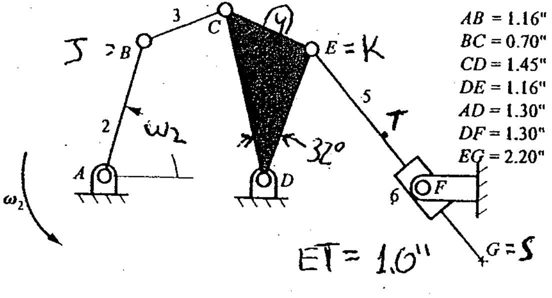

AB = 1.16"
BC = 0.70"
CD = 1.45"
DE = 1.16"
AD = 1.30"
DF = 1.30"
EG = 2.20"

ET= 1.0"

⑧

β= 30°
~~[illegible]~~
SE =KE=2.5"
TC =

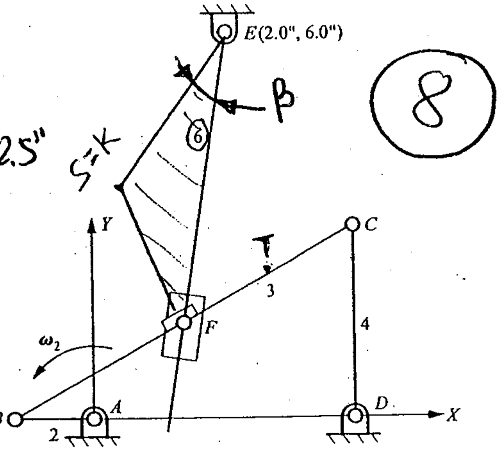

AB = 1.2"
BC = 6.0"
CD = 3.0"
AD = 4.0"
BF = 3.0"

⑨

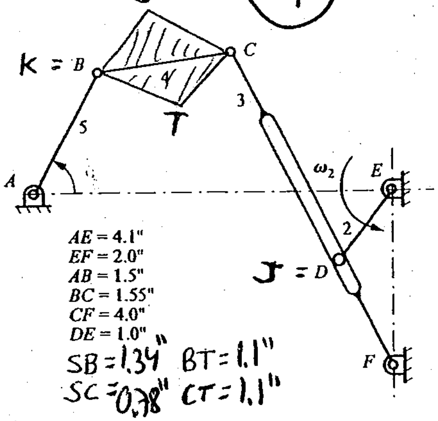

AE = 4.1"
EF = 2.0"
AB = 1.5"
BC = 1.55"
CF = 4.0"
DE = 1.0"
SB = 1.34" BT = 1.1"
SC = 0.78" CT = 1.1"

⑩

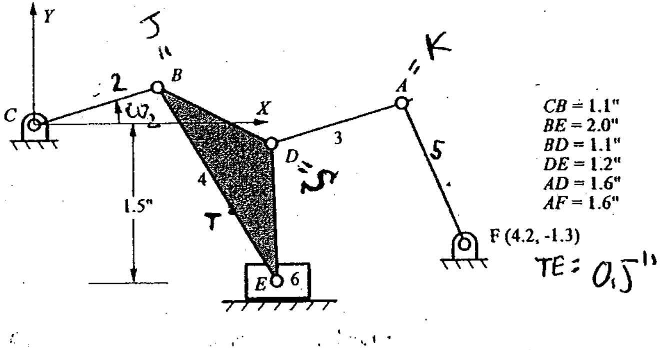

CB = 1.1"
BE = 2.0"
BD = 1.1"
DE = 1.2"
AD = 1.6"
AF = 1.6"
TE = 0.5"

⑪

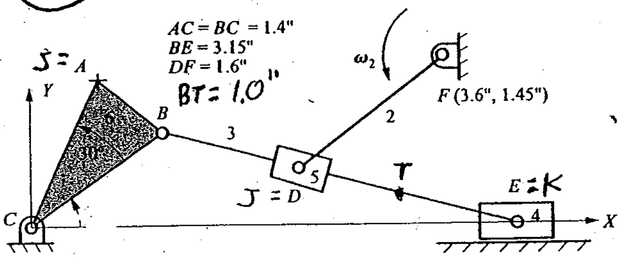

AC = BC = 1.4"
BE = 3.15"
DF = 1.6"
BT = 1.0"

⑫

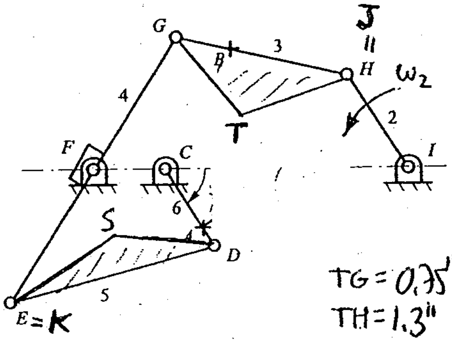

CD = 0.8"
CA = 0.6"
ED = 1.85"
EF = FG = 1.35"
GH = 1.5"
HI = 0.95"
CI = 2.1"
CF = 0.65"
TG = 0.75" SD = 1.6"
TH = 1.3" SE = 0.95"

⑬

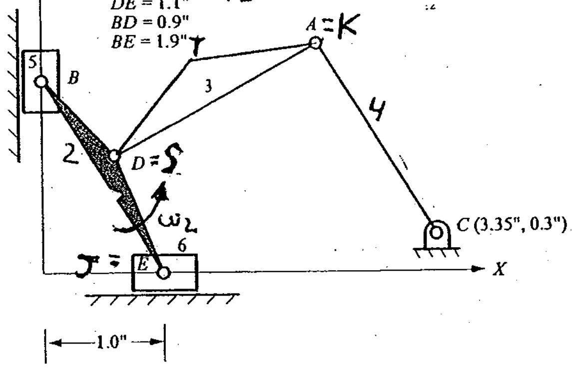

AC = 1.95"
AD = 2.0"
DE = 1.1"
BD = 0.9"
BE = 1.9"
TA = 1.53"
TD = 1.28"

⑭

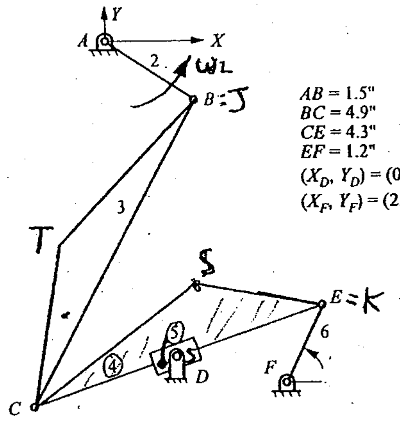

AB = 1.5"
BC = 4.9"
CE = 4.3"
EF = 1.2"
$(X_D, Y_D) = (0.95, -4.45)$
$(X_F, Y_F) = (2.5, -4.85)$
TB = 3.4" SE = 1.1"
TC = 3.4" SC = 4.2"

⑮

SD = 1.95"
SB = 3.4"

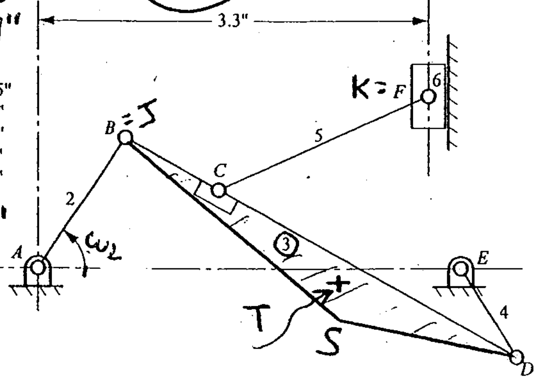

AB = 1.35"
BD = 3.9"
DE = 0.9"
BC = 0.9"
CF = 2.0"
TD = 1.5"
TB = 3"

⑯

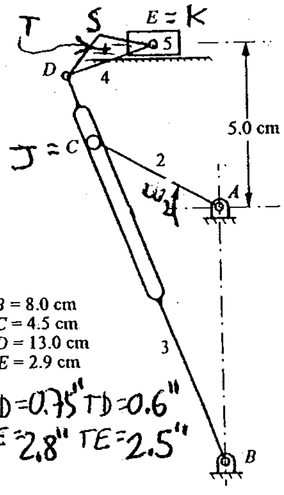

AB = 8.0 cm
AC = 4.5 cm
BD = 13.0 cm
DE = 2.9 cm
SD = 0.75" TD = 0.6"
SE = 2.8" TE = 2.5"

⑰

DS = 2.3" DT = 1.8"
ES = 2.3" ET = 1.8"

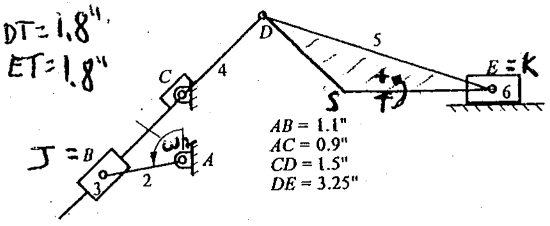

AB = 1.1"
AC = 0.9"
CD = 1.5"
DE = 3.25"

⑱

AC = 1.4"
AE = 3.15"
DF = 1.6"
BF = 1.25"
BD = 0.8"

TF = 1.2"
TD = 0.6"

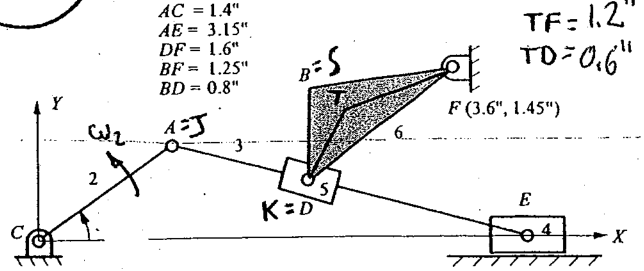

⑲

DA = 0.95"
DF = 2.45"
AB = 1.45"
BF = 1.8"

BE = 0.85"
EG = 2.2"
EC = 1.2"
CG = 1.25"

BT = 0.73"
AT = 1.2"

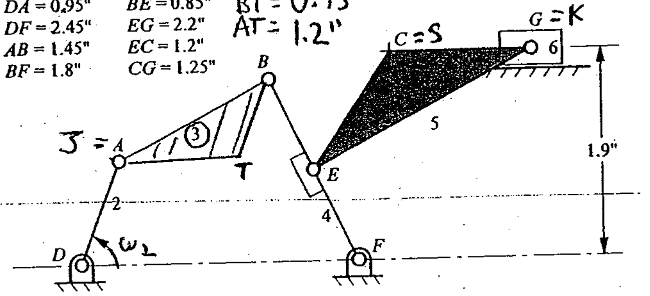

⑳

TE = 1.2" SD = 0.675"
SC = 1.17"

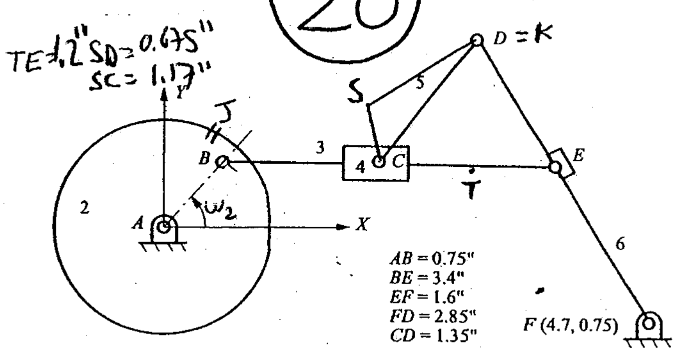

AB = 0.75"
BE = 3.4"
EF = 1.6"
FD = 2.85"
CD = 1.35"

㉑

DE = 2.5"
AD = 0.75"
AB = 1.75"
BE = 1.5"
GF = 1.5"

AT = 0.45"
BT = 1.7"

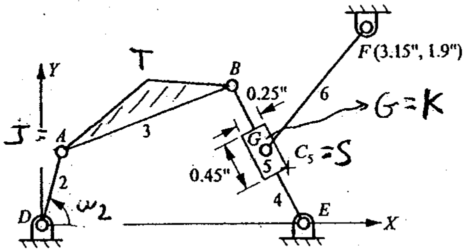

㉒

SD = 0.78"
SB = 2.9"

AB = 1.75"
BC = 1"
BD = 3"
ED = 2.25"
CE = 1.45"

TB = 0.9"
TA = 1.5"

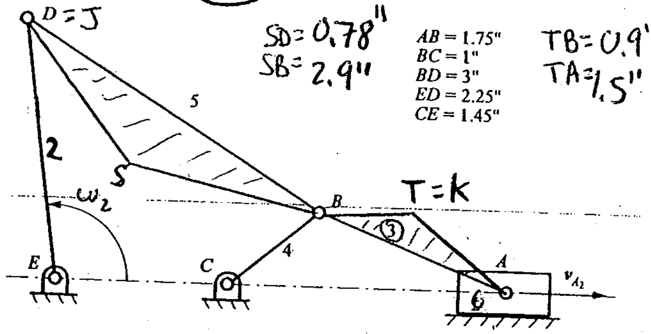

㉓

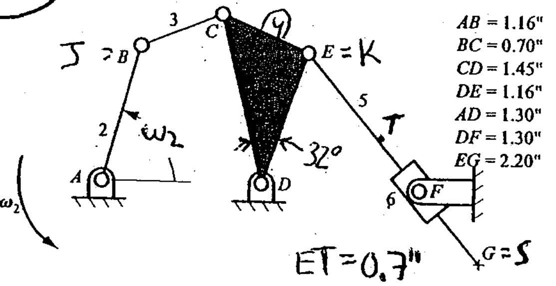

AB = 1.16"
BC = 0.70"
CD = 1.45"
DE = 1.16"
AD = 1.30"
DF = 1.30"
EG = 2.20"

ET = 0.7"

㉔

β = 15°
[illegible]
SE = KE = 2.5"
TC =

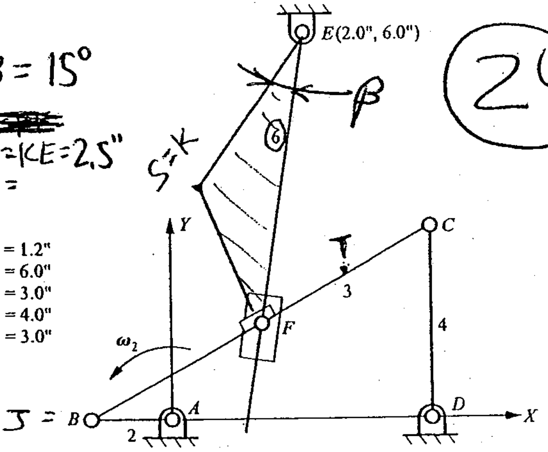

AB = 1.2"
BC = 6.0"
CD = 3.0"
AD = 4.0"
BF = 3.0"

25

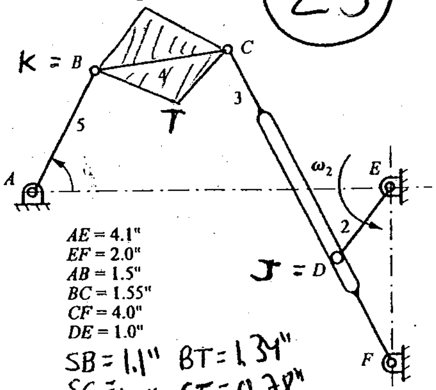

AE = 4.1"
EF = 2.0"
AB = 1.5"
BC = 1.55"
CF = 4.0"
DE = 1.0"

SB = 1.1" BT = 1.34"
SC = 1.1" CT = 0.78"

26

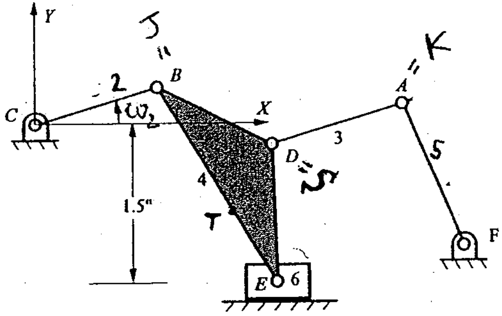

CB = 1.1"
BE = 2.0"
BD = 1.1"
DE = 1.2"
AD = 1.6"
AF = 1.6"

TE = 1.0"

27

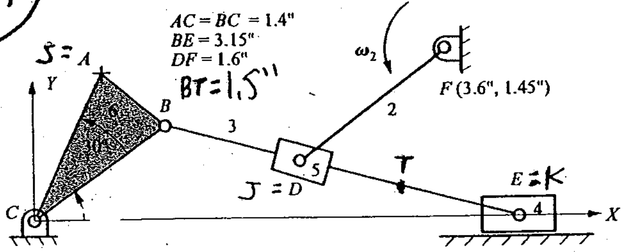

AC = BC = 1.4"
BE = 3.15"
DF = 1.6"
BT = 1.5"

28

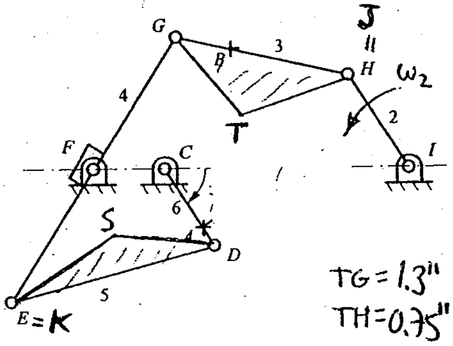

CD = 0.8"
CA = 0.6"
ED = 1.85"
EF = FG = 1.35"
GH = 1.5"
HI = 0.95"
CI = 2.1"
CF = 0.65"

TG = 1.3" SD = 0.93"
TH = 0.75" SE = 1.6"

29

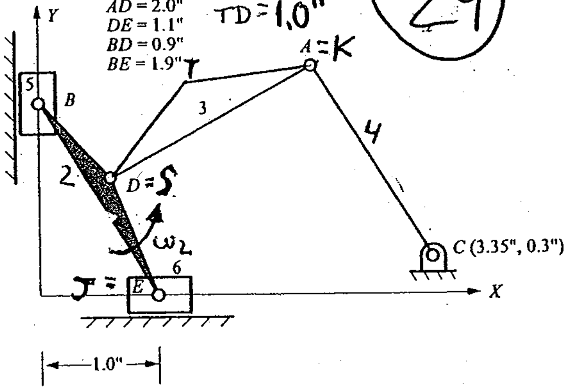

AC = 1.95"
AD = 2.0"
DE = 1.1"
BD = 0.9"
BE = 1.9"

TA = 1.73"
TD = 1.0"

30

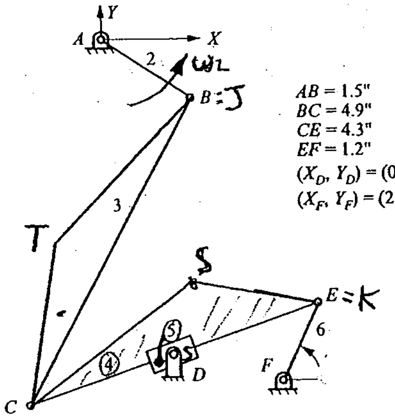

AB = 1.5"
BC = 4.9"
CE = 4.3"
EF = 1.2"
$(X_D, Y_D) = (0.95, -4.45)$
$(X_F, Y_F) = (2.5, -4.85)$

TB = 2.5" SE = 2.15"
TC = 4.2" SC = 3.72"

31

SD = 2.7"
SB = 2.7"

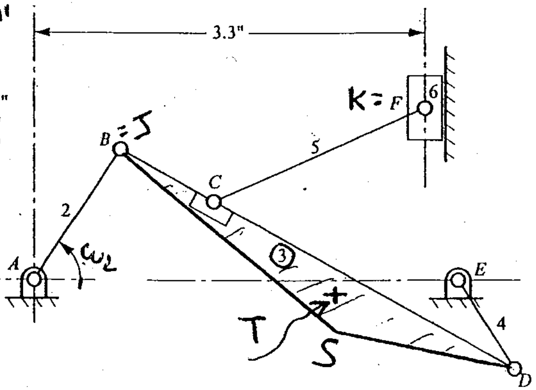

AB = 1.35"
BD = 3.9"
DE = 0.9"
BC = 0.9"
CF = 2.0"

TD = 2.3"
TB = 2.3"

32

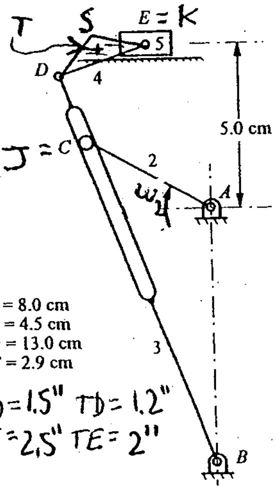

AB = 8.0 cm
AC = 4.5 cm
BD = 13.0 cm
DE = 2.9 cm

SD = 1.5" TD = 1.2"
SE = 2.5" TE = 2"

33

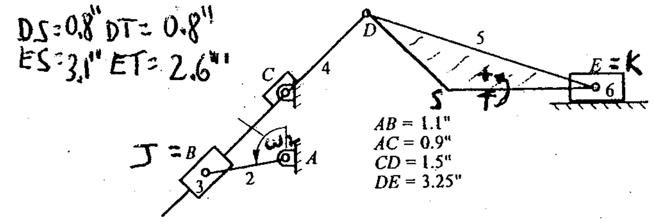

34

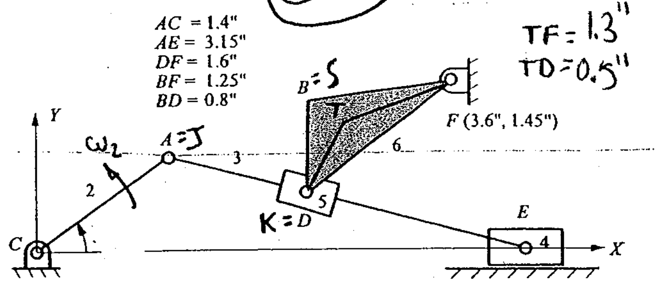

35

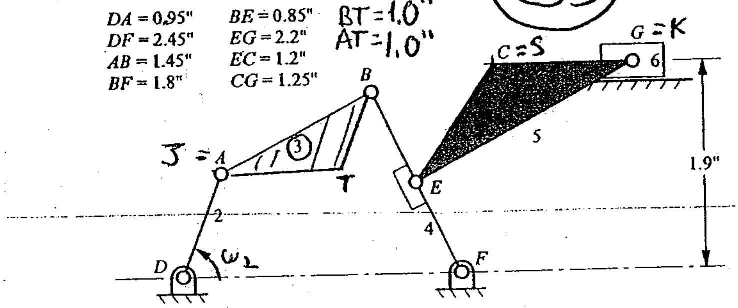

36

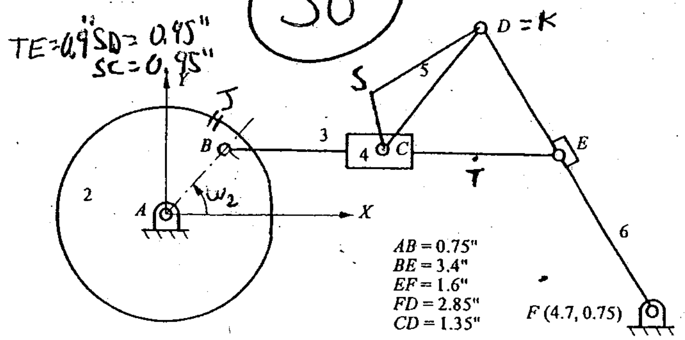

37

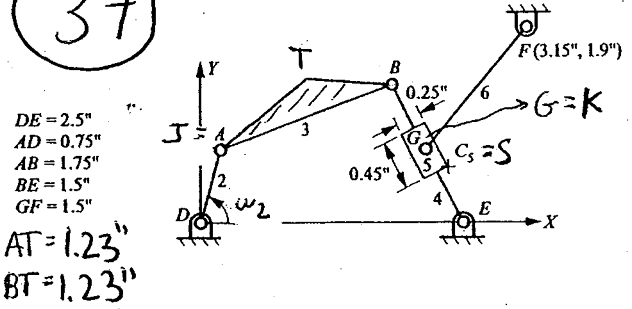

38

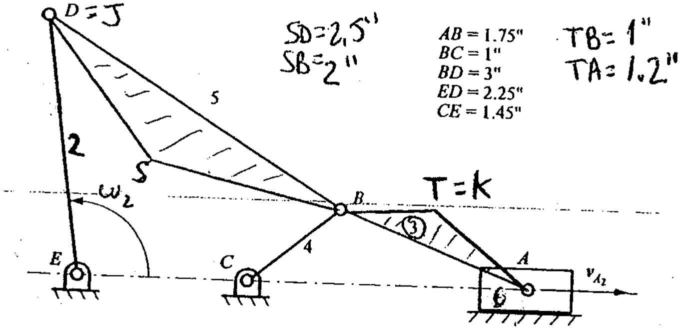

39

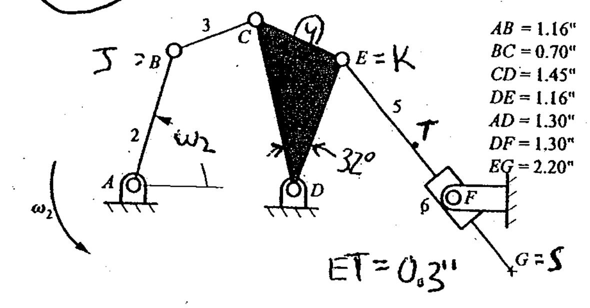

40

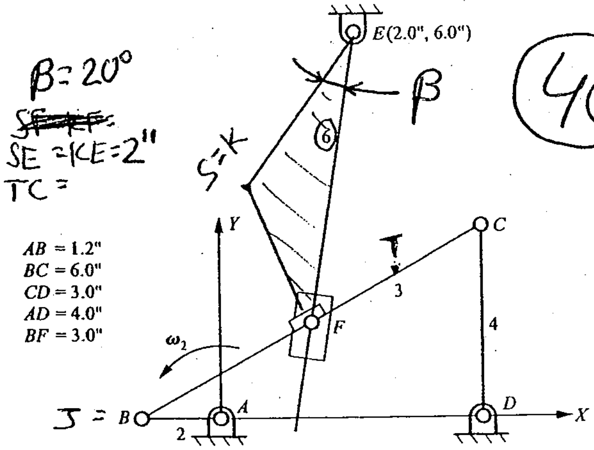

41

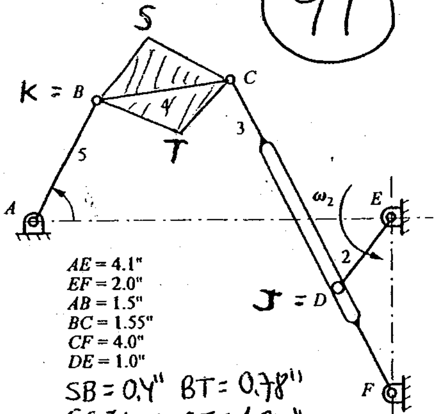

AE = 4.1"
EF = 2.0"
AB = 1.5"
BC = 1.55"
CF = 4.0"
DE = 1.0"

SB = 0.4" BT = 0.78"
SC = 1.5" CT = 1.34"

42

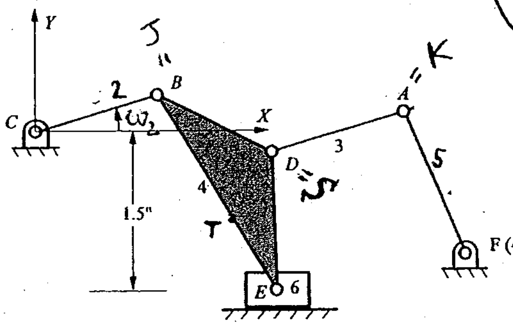

CB = 1.1"
BE = 2.0"
BD = 1.1"
DE = 1.2"
AD = 1.6"
AF = 1.6"

TE = 1.5"

43

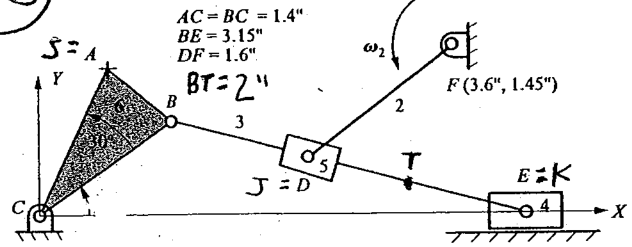

AC = BC = 1.4"
BE = 3.15"
DF = 1.6"
BT = 2"

44

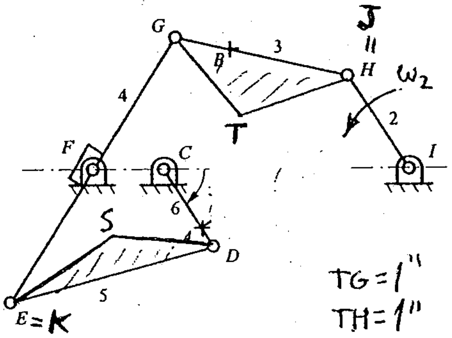

CD = 0.8"
CA = 0.6"
ED = 1.85"
EF = FG = 1.35"
GH = 1.5"
HI = 0.95"
CI = 2.1"
CF = 0.65"

TG = 1"
TH = 1"
SD = 1.3"
SE = 1.3"

45

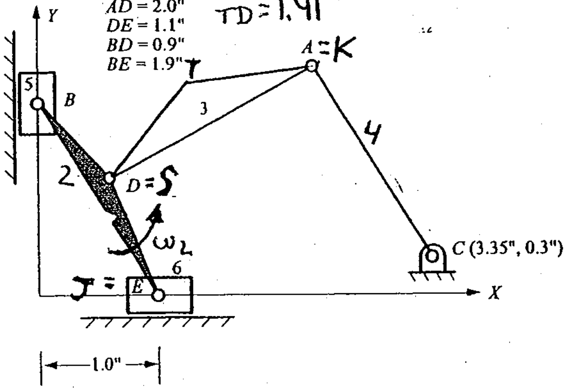

AC = 1.95"
AD = 2.0"
DE = 1.1"
BD = 0.9"
BE = 1.9"

TA = 1.41"
TD = 1.41"

46

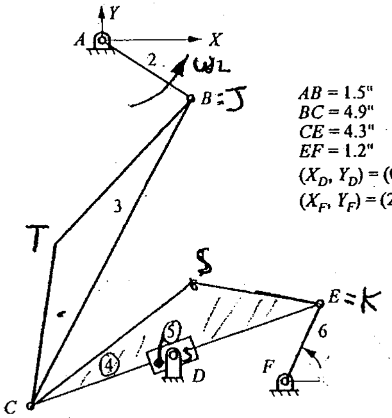

AB = 1.5"
BC = 4.9"
CE = 4.3"
EF = 1.2"
(X_D, Y_D) = (0.95, -4.45)
(X_F, Y_F) = (2.5, -4.85)

TB = 4.7" SE = 3"
TC = 1.3" SC = 3"

47

SD = 3.4"
SB = 1.95"

AB = 1.35"
BD = 3.9"
DE = 0.9"
BC = 0.9"
CF = 2.0"

TD = 3"
TB = 1.5"

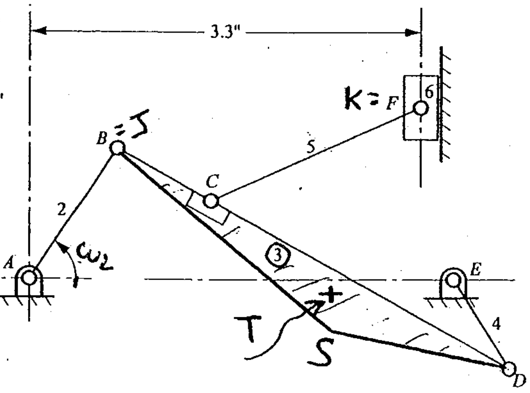

48

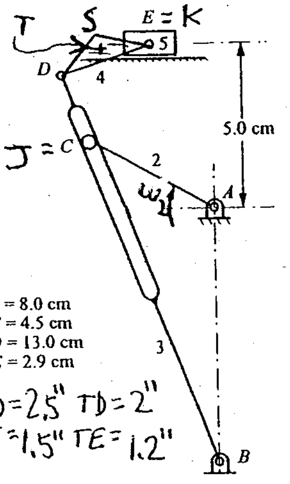

AB = 8.0 cm
AC = 4.5 cm
BD = 13.0 cm
DE = 2.9 cm

SD = 2.5" TD = 2"
SE = 1.5" TE = 1.2"

㊾

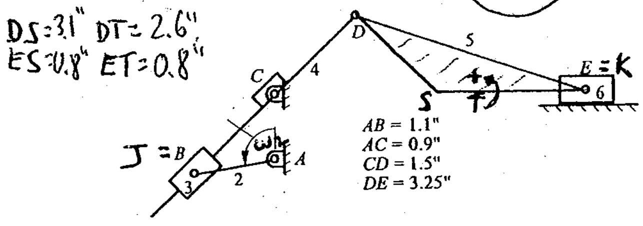
DS=3.1" DT=2.6"
ES=0.8" ET=0.8"

AB = 1.1"
AC = 0.9"
CD = 1.5"
DE = 3.25"

㊿

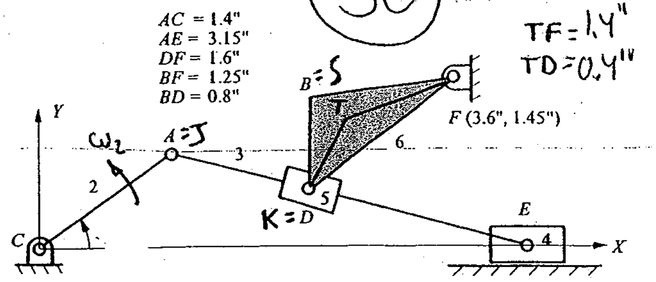
AC = 1.4"
AE = 3.15"
DF = 1.6"
BF = 1.25"
BD = 0.8"

TF = 1.4"
TD = 0.4"

(51)

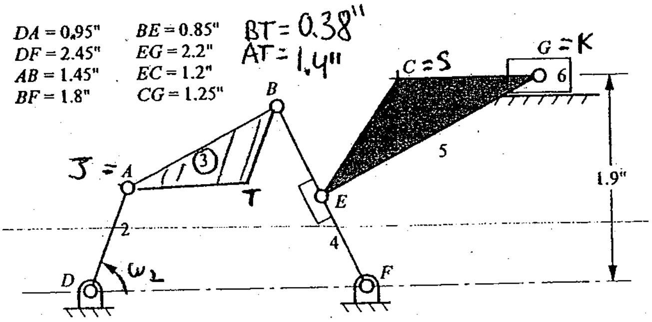
DA = 0.95"
DF = 2.45"
AB = 1.45"
BF = 1.8"

BE = 0.85"
EG = 2.2"
EC = 1.2"
CG = 1.25"

BT = 0.38"
AT = 1.4"

(52)

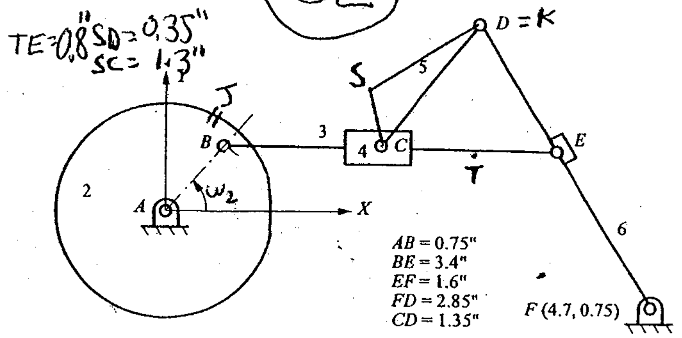
TE = 0.8" SD = 0.35"
SC = 1.3"

AB = 0.75"
BE = 3.4"
EF = 1.6"
FD = 2.85"
CD = 1.35"

(53)

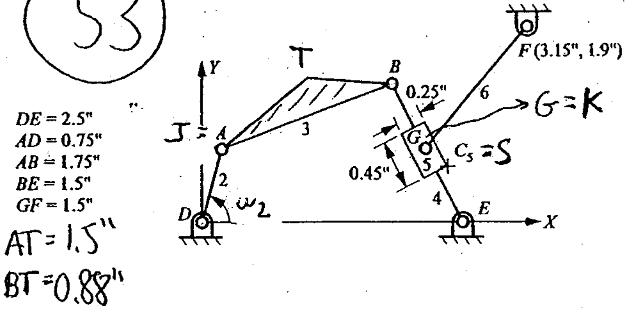
DE = 2.5"
AD = 0.75"
AB = 1.75"
BE = 1.5"
GF = 1.5"

AT = 1.5"
BT = 0.88"

(54)

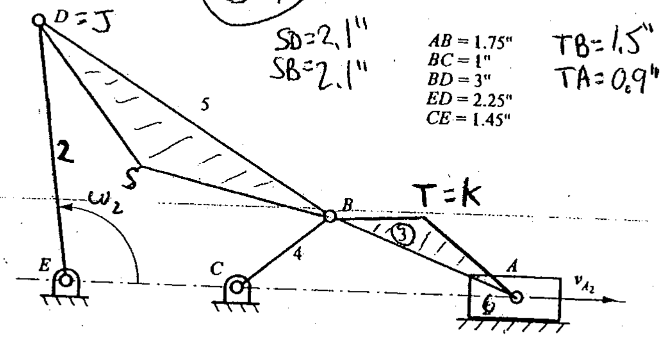
SD = 2.1"
SB = 2.1"

AB = 1.75"
BC = 1"
BD = 3"
ED = 2.25"
CE = 1.45"

TB = 1.5"
TA = 0.9"

(55)

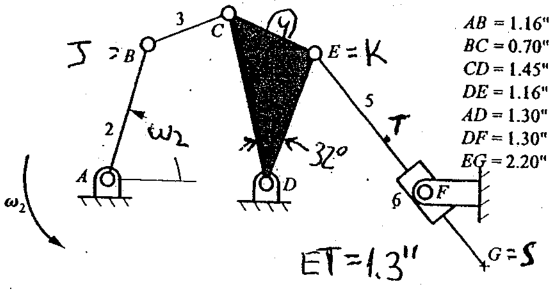
AB = 1.16"
BC = 0.70"
CD = 1.45"
DE = 1.16"
AD = 1.30"
DF = 1.30"
EG = 2.20"

ET = 1.3"

(56)

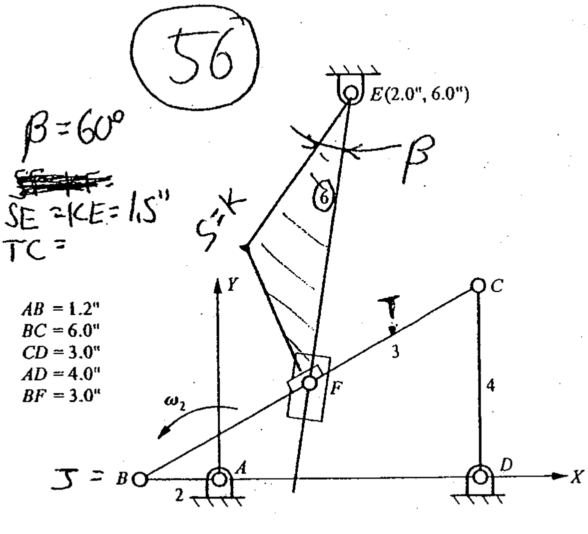
β = 60°
~~SE=~~
SE = KE = 1.5"
TC =

AB = 1.2"
BC = 6.0"
CD = 3.0"
AD = 4.0"
BF = 3.0"

EXAMPLE ②

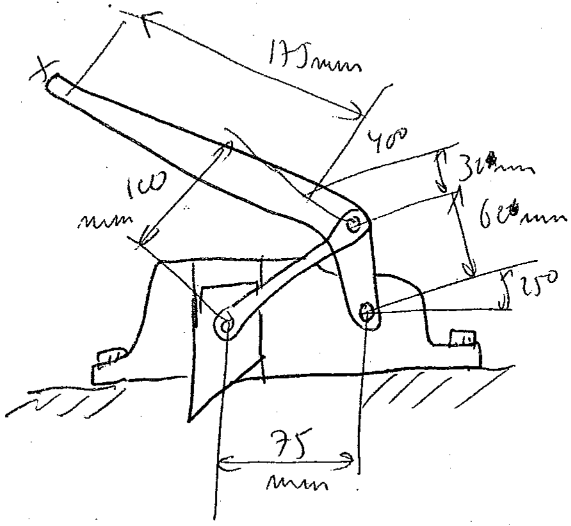

$|V_x| = 0.2$ m/s DOWN

$v_{\text{BLADE}} = ?$

INPUT LINK = 2
OUTPUT LINK = 4 (OR 3)
FRAME = 1

~~24~~	12 ✓
~~23~~	14 ✓
~~4~~	24

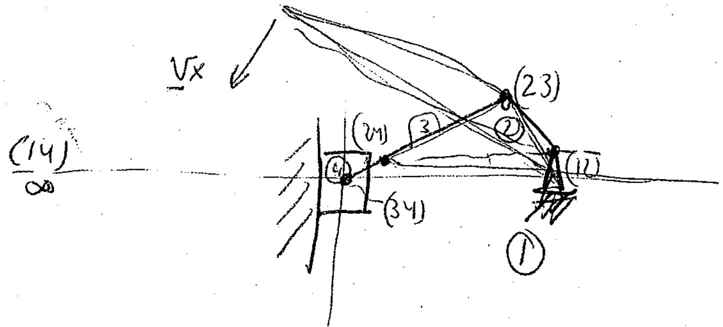

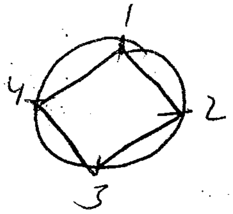

$$v_{(24)} = \omega_2 \cdot \overline{(24)(12)} = \frac{v_x}{\overline{X(12)}} \cdot \overline{(24)(12)} = v_{\text{BLADE}}\,!$$

$$\frac{\overline{(24)(12)}}{\sin(25° + 29.764°)} = \frac{60}{\sin(180 - (65 + 25 + 29.764))} \rightsquigarrow \overline{(24)(12)} = 56.454$$

~~$\overline{(12)(24)} = 60\cos 65° + \frac{49.6429}{100} \cdot 60\sin 65° = 52.352$~~ mm

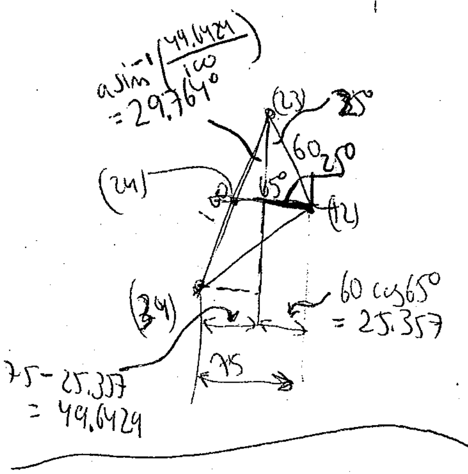

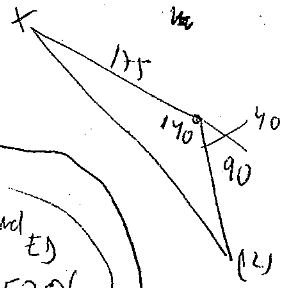

$$\overline{X(12)} = \sqrt{175^2 + 90^2 - 2 \cdot 175 \cdot 90 \cos 140°}$$

$$\overline{X(12)} = 250.71 \text{ mm}$$

$$v_{\text{BLADE}} = \frac{0.2 \text{ m/s}}{250.71} \cdot \overset{56.454}{\cancel{52.352}} = \cancel{0.04176 \text{ m/s}}$$

0.045 m/s

MISTAKE IN THE BOOK

3RD ED. PAGE 220

2nd ED PAGE 206

$$\omega_3 = \frac{v_{24}}{\boxed{4_{23}}} = \ldots \qquad \boxed{4_{23}} \longrightarrow r_{(13)-(23)}$$

$$\omega_4 = \cancel{\frac{V_{(23)}}{r_{(14)-(23)}}} = \ldots \Big\} = \frac{V_{(34)}}{r_{(14)-(34)}} = \ldots$$

Geometry and vb are given
What is the velocity of point E?

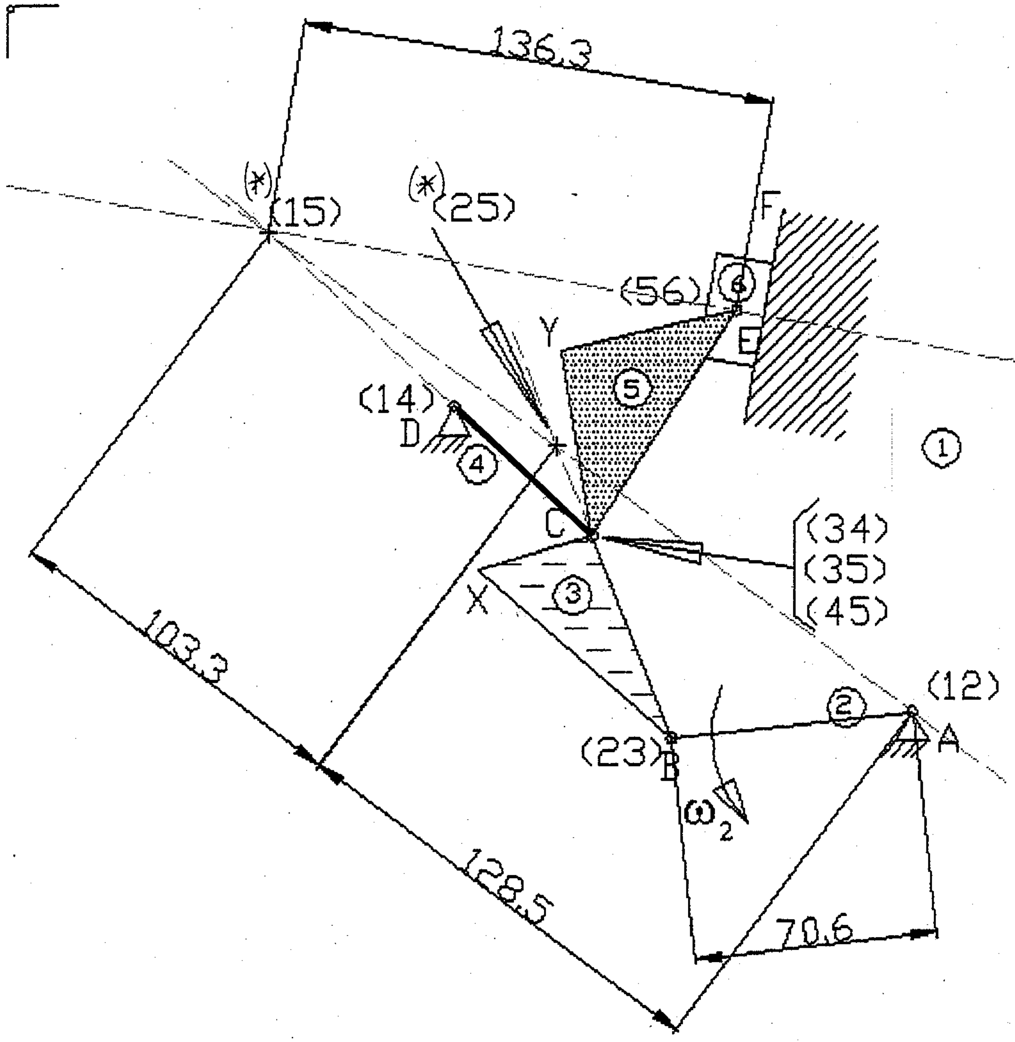

Point E belongs to link 5 as well as to link 6
Lets solve it looking for the center of rotation between links 2 and 5 (it may be solved also between links 2 and 6). The relations with the frame are also needed: (12) and (15)

(12), (15), (25)
OR
(12), (16), (26

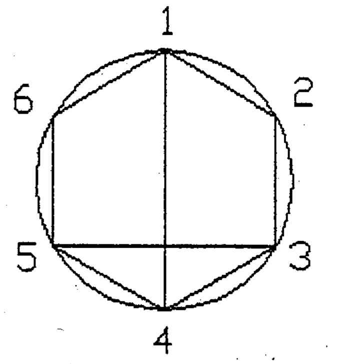

6-19

VELOCITY CURVES

$$v = \frac{dR}{dt} \simeq \frac{\Delta R}{\Delta t} \leftarrow \text{VERY NOISY} \quad \approx \frac{(R_{i+1} - R_i)}{(t_{i+1} - t_i)}$$

USING RICHARDSON METHOD (WHEN THE INCREMENTS BETWEEN THE INDEPENDENT VARIABLES ARE EQUAL ⟶ CONSTANT TIME INTERVAL)

$$v_i = \left(\frac{R_{i+1} - R_{i-1}}{2\Delta t}\right) - \left[\frac{R_{i+2} - 2R_{i+1} + 2R_{i-1} - R_{i-2}}{12\Delta t}\right]$$

i = data point index

R_i - position at data point i

$\Delta t = t_2 - t_1 = t_{40} - t_3 = \dots t_{i+1} - t_i$

WE GET PRECISION BUT LOOSE POINTS

EXAMPLE

(s) t	(m) R		v_i (m/s)	a_i (m/s²)
0	5	i-2	—	
0.1	4.92	i-1	—	
0.2	4.7	i	$\left[\frac{4.33-4.92}{2\cdot 0.1}\right] - \left[\frac{3.83 - 2\cdot 4.33 + 2\cdot 4.92 - 5}{12\cdot 0.1}\right] = -2.97$	—
0.3	4.33	i+1	-4.34	—
0.4	3.83	i+2	-5.58	-11.55
0.5	3.21		-6.65	-9.69
0.6	2.5		-7.52	—
0.7	1.71		-8.16	—
0.8	0.868		—	
0.9	0		—	

$$a_i = \left[\frac{v_{i+1} - v_{i-1}}{2\Delta t}\right] - \left(\frac{v_{i+2} - 2\cdot v_{i+1} + 2 v_{i-1} - v_{i-2}}{12\cdot \Delta t}\right)$$

Florida International University
Department of Mechanical and Materials Engineering
Kinematics & Mechanism Design

EML 3262 **Final Project** March 8, 2005

Mechanism Analysis Using PRO/E

Introduction

The use of an engineering environmental multiplication software for the development and design of machines is being common in industry. The objective of this project is to learn the application related with the course. Working in a team attached to a multi-user design environment, let you analyze a mechanism being design by different groups. The final project includes the analysis of your **individual** mechanism, following the procedure specified bellow and the submit guide.

Procedure:

Link 2 of the mechanism is the input.

1. Calculate the DOF of the mechanism
2. Model the links in PRO/E. Add points in the model where a parameter is needed later to be analyzed using the mechanism application. Call each part as explained in the following example:
   link3_1399999.prt

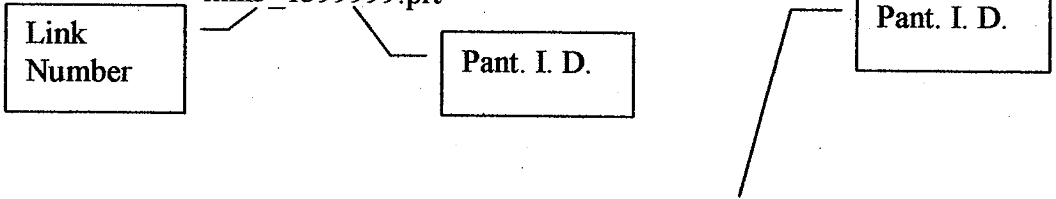

3. Open a new assembly called as asm_1399999.asm; and assemble the mechanism
4. Add a rotational motor on link2 – constant velocity of 36deg/s.
5. Run a kinematic analysis
6. Investigate the limiting positions of the mechanism. Write the limiting positions of link 2 and link 6
7. Adjust the motor to run the mechanism between the limiting positions (about 0.5° from each limit in order to be inside the range of the cycle), using a sinusoidal function. The motor shall do a full cycle in 10 seconds. If link 2 is a crank, let the motor operate at constant speed of 36 °/s
8. Run again an analysis using the movement between the limiting positions.
9. Find the velocity of point K as a function of time(for one full cycle).
10. Plot the displacement of Point K in the x direction (Kx) as a function of the angular displacement of link 2 (for one full cycle).
11. Plot the displacement of Point K in the y direction (Ky) as a function of the angular displacement of link 2 (for one full cycle).

12. Plot the velocity of Point K in the x direction (v_{Kx}) as a function of the angular displacement of link 2 (for one full cycle).
13. Plot the velocity of Point K in the y direction (v_{Ky}) as a function of the angular displacement of link 2 (for one full cycle).
14. For the full cycle, draw the trace of the points of interest S, T. Calculate their lengths.
15. Calculate the relative velocity vector between points K and J (magnitude and direction) as a function of time (export to Excel the x and y components of the velocities of points J, K. Subtract them and calculate its magnitude and angle. Plot the graph of magnitude as a function of time and the graph of vector's angle as a function of time (for one full cycle).
16. A linear damper is needed between points J and K – Calculate the expanding / retracting velocity of the damper as a function of time (multiply $\underline{v}_{KJ}$ by the unit vector in KJ direction) .
17. Plot the Acceleration magnitude of point K and its direction as a function of time (for one full cycle).
18. Multiply the length of link 2 by 1.2; update the model and rework 6. through 16.
19. Multiply the length of link 2 by 0.8; update the model and rework 6. through 16.

Submit:

1. Links and assembly files
2. Excel files used for the calculations
3. for the original length of link 2; 1.2*(original length of link 2); 0.8*(original length of link 2):
    a. The limiting position values and picture files of the limiting positions (save as *.Tiff)
    b. Movie file of the mechanism moving one full cycle.
    c. Procedures 9. to 13. plots. Each plot shall include the three curves
    d. The traces of points S, T (Tiff files) and their lengths
    e. Procedures 15. to 17. plots. Each plot shall include the three curves
4. The solutions, pictures and graphs shall be submitted as a word file + **hard copy**. Explain your steps, the calculations done, units, main conclusions about the results and discuss the advantages using a mechanism application software as well as its limitations for mechanism analysis.
5. The following files should be submitted:
    a. The link parts and the assembly
    b. The movies (X3)
    c. The Excel file
    d. The word file

Submitting Date:

Thursday, April 21, 2005

Florida International University
Department of Mechanical and Materials Engineering
Kinematics & Mechanism Design

EML 3262 Quiz # 2 – Version A March 17, 2005

First and Last Name:____________________________________ Pant. I.D.:______________________

Follow the instructions before you begin the quiz:

This test is 60 minutes long. It is not permitted to pass or receive any hardware nor software during the quiz. Use your own papers, pens, pencils, calculators, etc.

The following items are allowed during the quiz: compass, protractor, ruler, 45° triangle, 60° triangle, pencil, eraser, pens, non programmable calculator, one A4 paper with your remarks, formulas, etc., Blank papers. **SOLVE THE QUIZ ON THIS PAGE**

Write your first and last name, your Panther I. D. & the quiz version (A)

Good Luck!

The mechanism from Quiz # 1 is given (after link 6 moved 200 mm right). The velocity of link 6 is **1.2m/s** right (➔). Use the geometry given to solve graphically:

1. Draw the velocity image of the mechanism (The scale is given and the velocity of point F already appears. Use the rectangular space for the solution) *(25%)*
2. What are the velocity vectors of pin join B3 (=B4), pin join E and the retracting velocity of the actuator? *(25%)*
3. Find the **primary** instant centers of the mechanism. *(15%)*
4. Find instant center (14) *(10%)*
5. Calculate the velocity vector of B4 (=B3) using the instant center method. *(25%)*

1mm=0.02376m/s

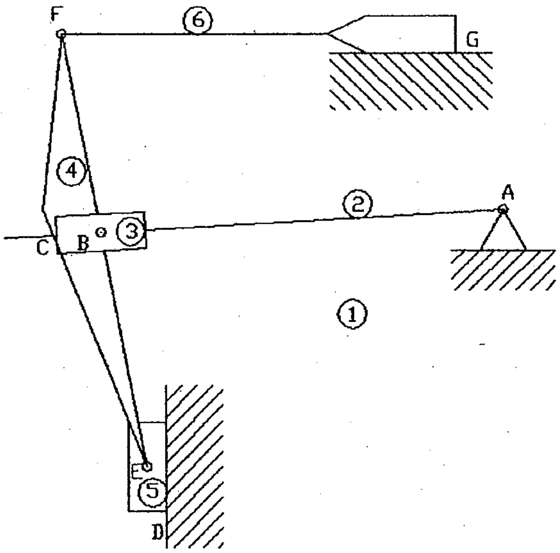

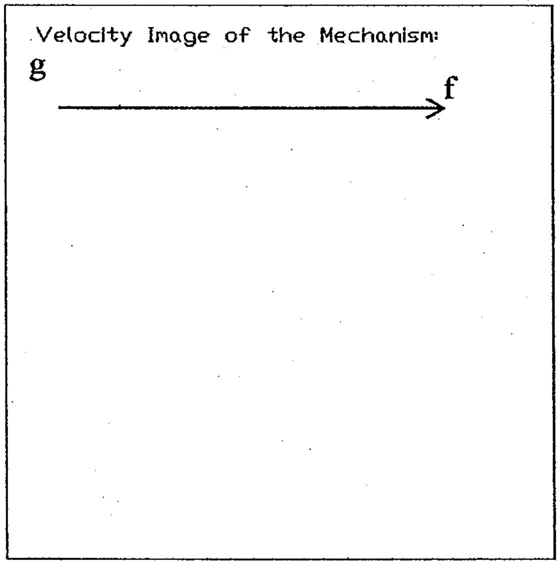

Florida International University
Department of Mechanical and Materials Engineering
Kinematics & Mechanism Design

EML 3262 Quiz # 2 – Version B March 17, 2005

First and Last Name:______________________ Pant. I.D.:______________

Follow the instructions before you begin the quiz:
This test is 60 minutes long. It is not permitted to pass or receive any hardware nor software during the quiz. Use your own papers, pens, pencils, calculators, etc.
The following items are allowed during the quiz: compass, protractor, ruler, 45° triangle, 60° triangle, pencil, eraser, pens, non programmable calculator, one A4 paper with your remarks, formulas, etc., Blank papers. **SOLVE THE QUIZ ON THIS PAGE**

Write your first and last name, your Panther I. D. & the quiz version (B)

Good Luck!

The mechanism from Quiz # 1 is given (after link 6 moved 200 mm right). Now, the velocity of link 6 is **0.8m/s** left (←). Use the geometry given to solve graphically:

1. Draw the velocity image of the mechanism (The scale is given and the velocity of point F already appears. Use the rectangular space for the solution) *(25%)*
2. What are the velocity vectors of pin join B3 (=B4), pin join E and the expanding velocity of the actuator? *(25%)*
3. Find the **primary** instant centers of the mechanism. *(15%)*
4. Find instant center (14) *(10%)*
5. Calculate the velocity vector of B4 (=B3) using the instant center method. *(25%)*

1mm=0.01584m/s

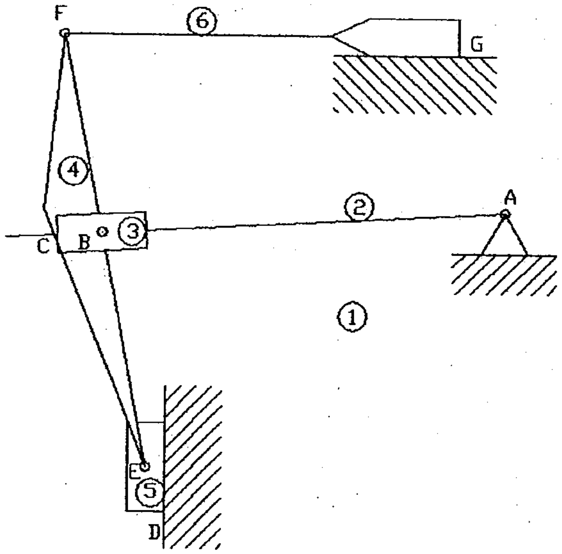

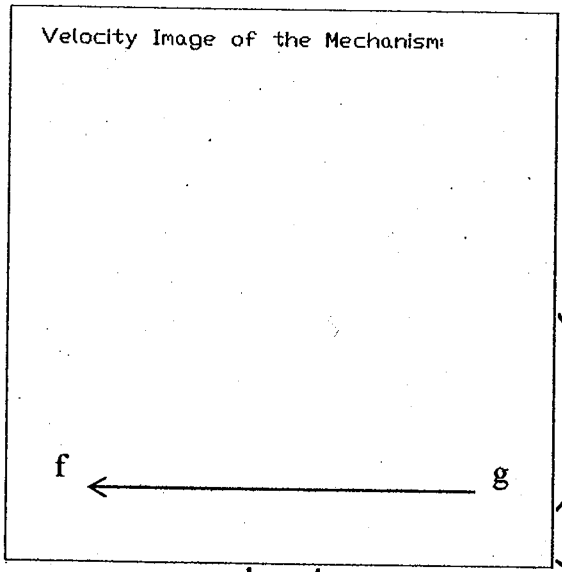
Velocity Image of the Mechanism:

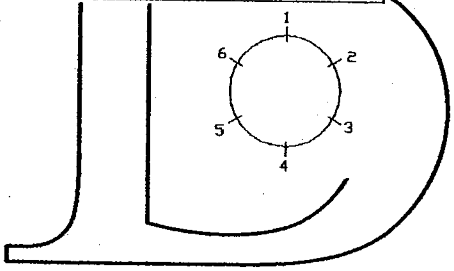

VERSION A – SOLUTION

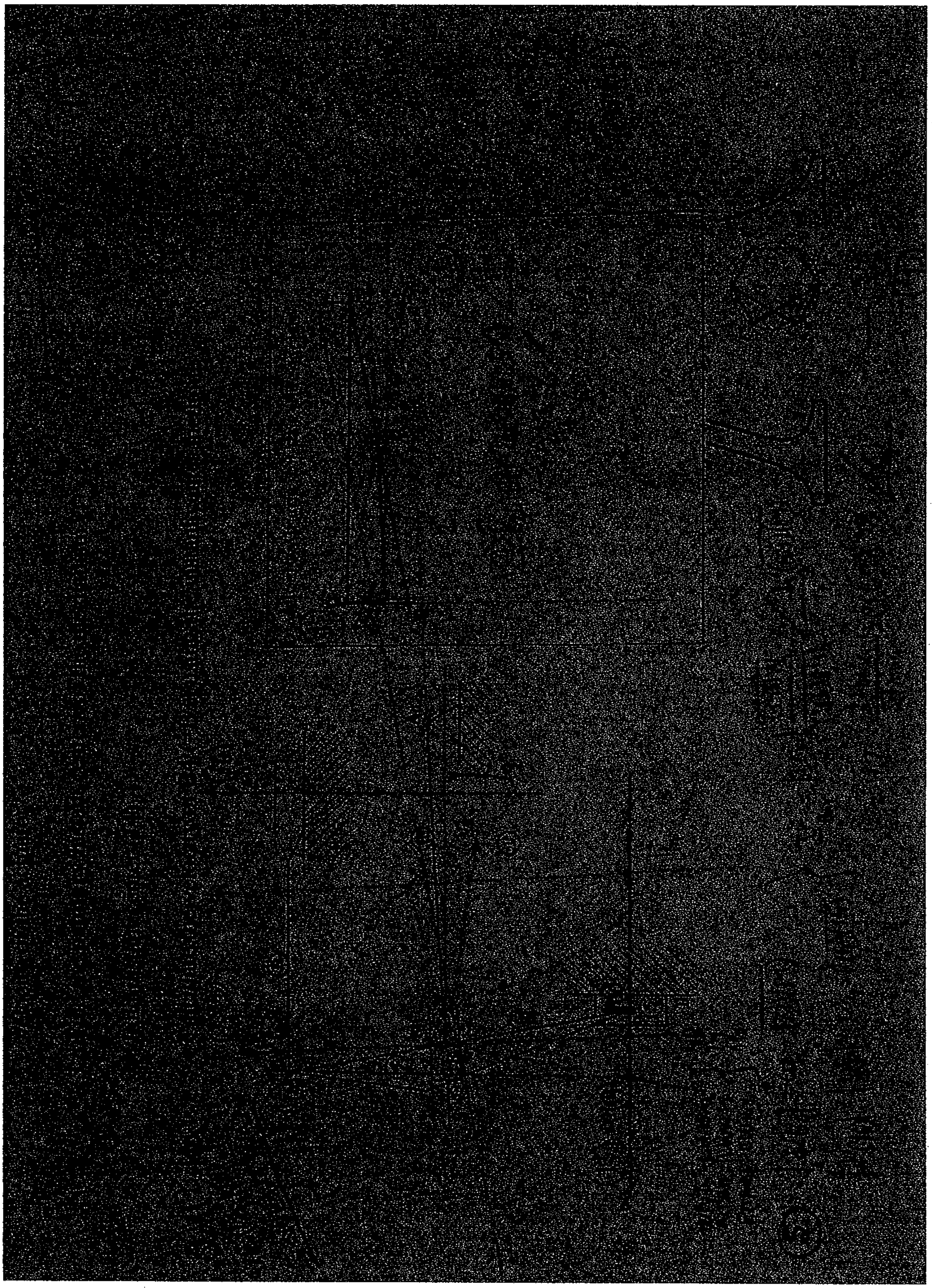

VERSION B – SOLUTION

Quiz 2 - Version 4 - Solution

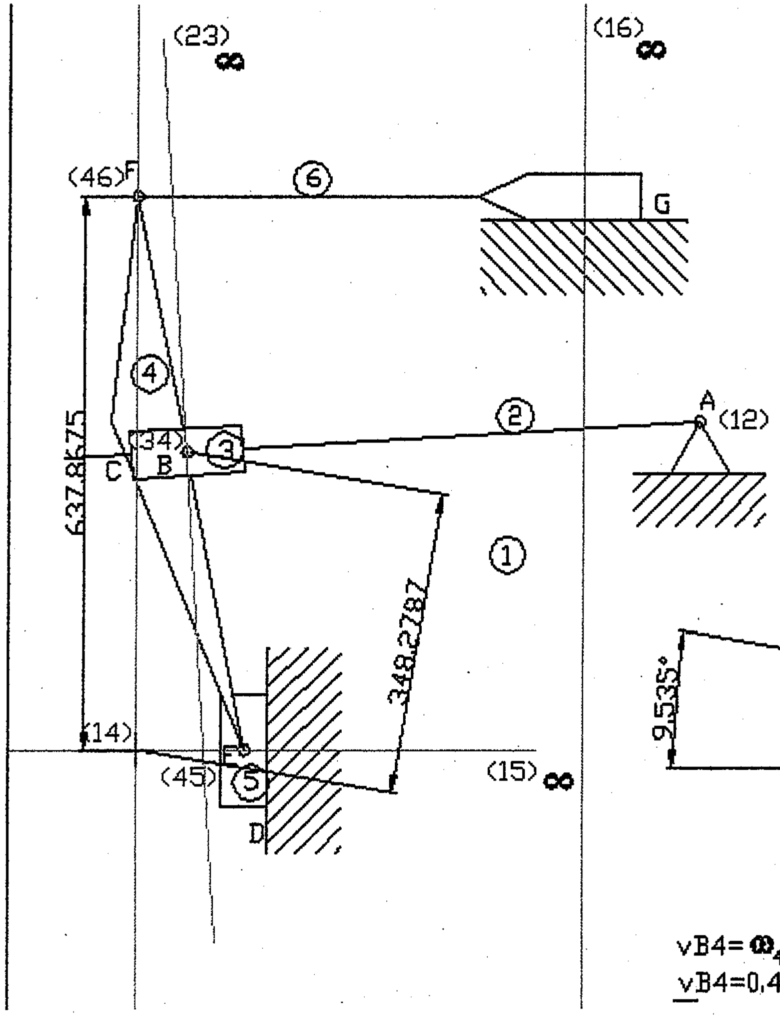

Velocity Image of the Mechanism:

fg=50.5mm; vF=50.5*0.01584=0.8m/s (given)
ed=9.8963mm; vE=9.8963*0.01584=0.1568m/s
b3,4a=27.573mm; vB3,4=...=0.4368m/s
b3,4b2=26.88mm; vB3,4B2=...=0.4258m/s

$\underline{v}E=0.1568 m/s \nearrow\angle 90°$
$\underline{v}B3,4=0.4368 m/s \nearrow\angle 170.465°$
$\underline{v}B3,4B2=0.4258 m/s \nearrow\angle 183.343°$

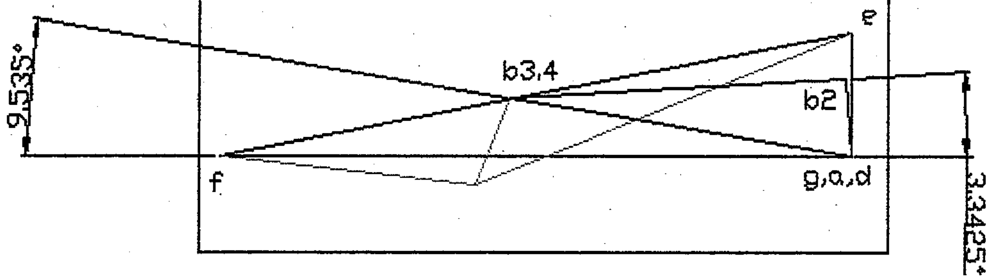

$vB4=\omega_4*\overline{(34)(14)}=(vF/\overline{(46)(14)})*\overline{(34)(14)}=(0.8/637.8675)*348.2787=0.4368 m/s$
$\underline{v}B4=0.4368 m/s \nearrow\angle 170.465°$

KINEMATICS & MECHANISM DESIGN EML 3262

	Write your Name	PantherID	VERSION		
20	SHAKA HARPER	1012782	A	65	
11	DANIEL DUARTE	1013134	B	63	
46	JORGE TERCERO	1014132	B	30	
32	FERNANDO OBANDO	1016302	B	41	
33	Gonzalo Ocampo	1021312		87	
35	Thierry Pamphile	1024196	A	68	
24		1053723			
30	Matthew Mihalovits	1076857	A	07	
22	Yuri [illegible]	1093801	A	40	
36	Michael Patterson	1094554		89	
56	Hector Roos	1096368	A	05	
21	Matt Johnson	1099870	A	59	
54	MICHAEL WOLFF	1103264	B	49	
44	KETH SHOWALTER	1122826	B	43	
52	Albert Vidaud	1144711	A	21	
58		1223838			
18	Ernesto Gutierrez	1281667	B	57	
17	Paul Grata	1282007	A	2	
1	Jorge Alvarez	1290400	B	12	
57		1305062			
25		1306053			
42		1308401			
6	Donny Brenner	1310512	B	52	
53	JUAN Villegas	1317660	B	53	
14		1319297			
4		1321865			
15	Maribel Garcia	1322452	A	35	
51	JUAN VIDAL	1322725		13	
3	Ronald Bellorin	1325730	A	56	
40	Sergio Sanchez	1333502	B	40	
38	Felipe Rendon	1334090	B	43	
41		1339149	A	46	
26	GEORGETTE MARTINEZ	1339663	A	13	
34		1340224			
43	Luis Sepulveda	1349774	A		
13	RL	1352635		17	
28	Verdi M. Mayer	1358420		32	
37	Julio Ramirez	1358822	A	24	
45		1362777	A	54	
29		1366034	B	67	
48		1369320	B	31	
8		1370775			
49	Luis Valencia	1372270	A	51	
39		1372735			
47	Pedro Luis Toledo	1374102	B	22	
2	Melanie Andara	1374312	A	45	
59		1381726			
16	Cindy Gomez	1390408	A	65	
7	MARC R. BRERETON	1391782	A	41	
10	ARIEL DIAZ	1396467	B	75	
5		1396896			
55	ANDRES ZAMORA	1397908	A	31	
23		1398304			
27	DANIEL MATUS	1398577	B	51	
31	TREVIS MOORLEY	1399021	B	45	
9	Miguel Caorsi	1399282	B	43	
19	D Harper	1399737		55	
12		1399800			
50		1399857			

Acceleration Analysis

The acceleration analysis is mainly needed for the force analysis.

Linear acceleration of Points

$$\underline{a} = \lim_{\Delta t \to 0} \frac{\Delta \underline{v}}{\Delta t} = \frac{d\underline{v}}{dt} = \frac{d^2 \underline{R}}{dt^2} \approx \frac{\Delta \underline{v}}{\Delta t}$$

RECTILINEAR MOTION (NO CHANGE IN DIRECTION)

$[a] = \frac{m}{s^2}, \frac{in}{s^2},$

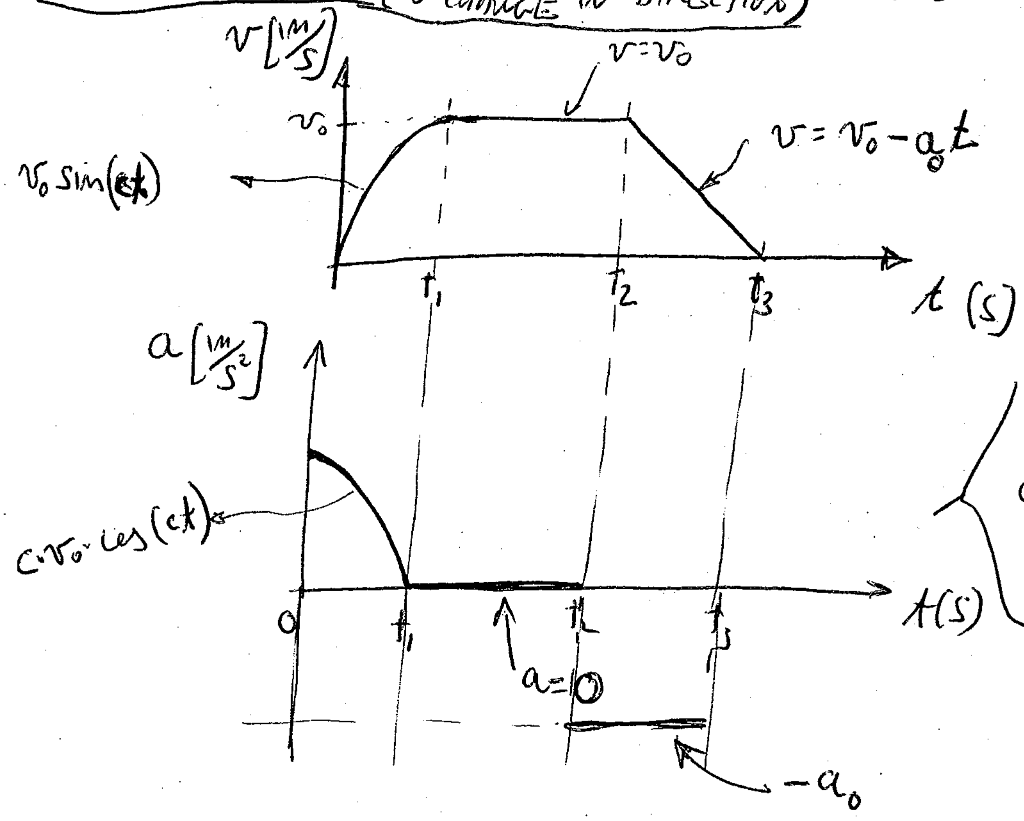

a may be a discontinued curve

$$\text{Jerk} = \frac{da}{dt}$$

$$\text{Quirk} = \frac{dJ}{dt}$$

7-2

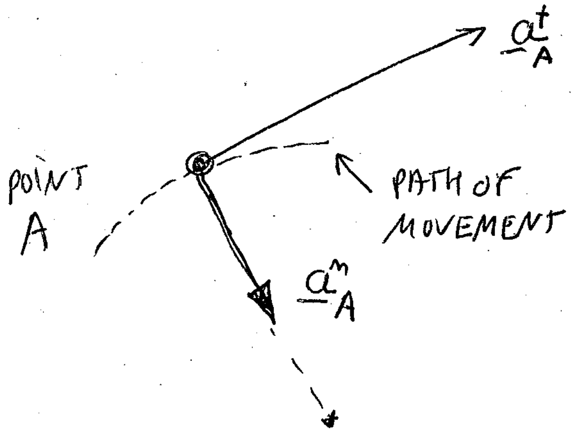

We are going to differ between the tangential acceleration vector (parallel to the velocity vector) and the normal acceleration vector of point A (POINTED through the center of curvature of the path of movement.

ACCELERATION OF A LINK

$$\alpha = \lim_{\Delta t \to 0} \frac{\Delta \omega}{\Delta t} = \frac{d\omega}{dt} = \frac{d^2\theta}{dt^2} \approx \frac{\Delta \omega}{\Delta t}$$

$$(\alpha) = \frac{deg}{s^2}, \frac{rev}{s^2}, \frac{rad}{s^2}$$

For constant $\alpha \rightsquigarrow \Delta\omega = \alpha \Delta t$

$$\Delta\theta = \frac{1}{2}\alpha\Delta t^2 + \omega_{initial}\Delta t$$

$$(\omega_{final})^2 = (\omega_{initial})^2 + 2\alpha\Delta\theta$$

displacement

EQ (7.12)
ED 3 - PAGE 647
ED 2 - ~~PAGE~~ NONE
} ΔΘ INSTEAD OF ΔR

7-3

$\hat{x}, \hat{y}, \hat{z}$ - "CONSTANT" (INERTIAL) COORDINATE SYSTEM

7-3

$\hat{x}', \hat{y}', \hat{z}'$ - ROTATING COORDINATE SYSTEM ATTACHED TO THE RIGID BODY

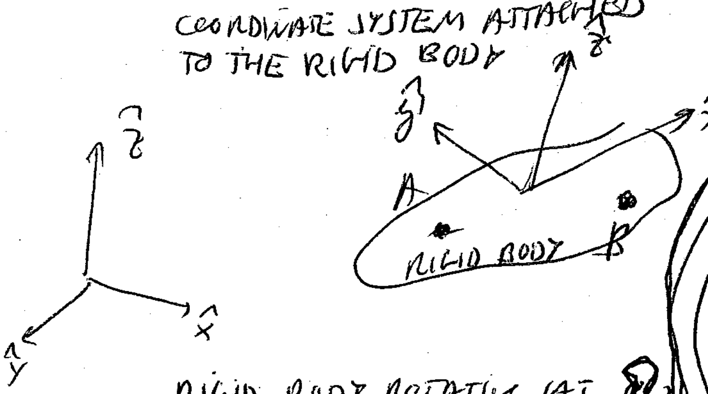

RIGID BODY ROTATING AT $\underline{\Omega}$

$$\underline{a}_B = \underline{a}_A + \underline{a}_{BA}$$

$$\underline{a}_{BA} = \frac{d\underline{v}_{BA}}{dt} = \underbrace{\frac{\partial \underline{v}_{BA}}{\partial t}}_{\dot{\underline{\Omega}} \times \underline{r}_{BA}} + \underline{\Omega} \times \underline{v}_{BA}$$

$$\boxed{\underline{v}_{BA} = \underbrace{\frac{\partial \underline{v}_{BA}}{\partial t}}_{0} + \underline{\Omega} \times \underline{r}_{BA}}$$

$\cancel{\underline{a}_{BA} = \underline{\Omega} \times \underline{\Omega}}$

$$\underline{a}_{BA} = \dot{\underline{\Omega}} \times \underline{r}_{BA} + \underline{\Omega} \times (\underline{\Omega} \times \underline{r}_{BA})$$

$\dot{\underline{\Omega}} \parallel \underline{\Omega}$ ⇝ $\dot{\underline{\Omega}} \times \underline{r}_{BA} \parallel \underline{\Omega} \times \underline{r}_{BA} \parallel \underline{v}_{BA}$

$\underline{\Omega} \times (\underline{\Omega} \times \underline{r}_{BA})$ ⊥ $\underline{\Omega}$ AND ⊥ TO $\underline{v}_{BA}$ ⇝ $\parallel \overline{AB}$

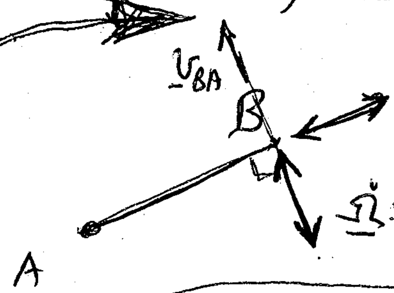

$\underline{\Omega} \times (\underline{\Omega} \times \underline{r}_{BA}) = \underline{a}^N_{BA}$

$\dot{\underline{\Omega}} \times \underline{r}_{BA} = \underline{a}^T_{BA}$

$$\boxed{\underline{\Omega} = \omega \cdot \hat{z}', \quad |\underline{r}_{BA}| = \overline{AB}, \quad \dot{\underline{\Omega}} = \alpha \cdot \hat{z}'}$$

$$\underline{a}_B = \underline{a}_A + \underline{a}_{BA} = \underline{a}_A + \left(\underline{a}^T_{BA} + \underline{a}^N_{BA}\right) = \overbrace{\alpha \cdot \overline{AB} \angle \perp AB}^{\underline{a}^T_{BA}} +$$

α DIRECTION

TANGENTIAL ACC.

$$+ \omega^2 \overline{AB} \angle \parallel AB_{\text{FROM } B \text{ TO } A}$$

(OPPOSITE TO $\underline{r}_{BA}$)

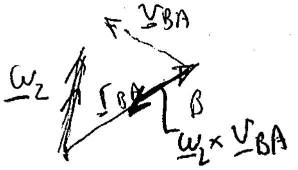

7-4

EXAMPLE:

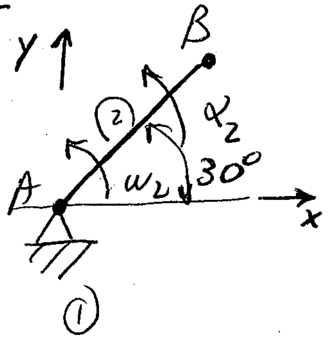

$$\left.\begin{matrix} n=2 \\ jp=1 \end{matrix}\right\} DOF = 3(2-1)-2 = 1$$

$\overline{AB} = 0.5\,m$

$\omega_2 = 2 \frac{rad}{s}$

$\alpha_2 = 100 \frac{rad}{s^2}$

DETERMINE:

$\underline{a}_B$

$$\underline{a}_B = \underset{0}{\cancel{a_A}} + \underline{a}_{BA} = \underline{a}_{BA}^T + \underline{a}_{BA}^N =$$

ar $\underline{a}_{BA}^T = \alpha \cdot \overline{AB} \angle \perp AB, \alpha$ direction $= 100 \cdot 0.5 \angle 120°$

$= 50\,m/s^2 \angle 120°$

$\underline{a}_{BA}^N = \omega_2^2 \overline{AB} \angle /\!/AB$ FROM B → A

$= 2^2 \cdot 0.5 \angle 210° = 2\,m/s^2 \angle 210°$

SCALE
1mm = 1 m/s²

FOLLOWING $\underline{a}_B = \underline{a}_{BA}^T + \underline{a}_{BA}^N$:

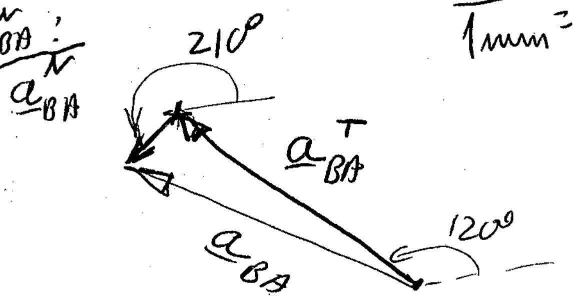

ANALITICALLY:

$$\underline{a}_B = (50 \cos 120° + 2 \cdot \cos 210°)\hat{x} + (50 \sin 120° + 2 \sin 210°)\hat{y}$$

$$\underline{a}_B = -26.732\hat{x} + 42.301\hat{y} \quad m/s^2$$

$$\underline{a}_B = 50.04\ m/s^2 \angle 122.29°$$

7-5

THE NORMAL ACCELERATION $\boxed{|\underline{a}^{N}_{BA}| = \omega^2 \overline{AB}}$

THE RELATION FROM CHAPTER 6 $\Bigg\}$ $|\underline{v}_{BA}| = \omega \overline{AB}$

$$\omega = \frac{|\underline{v}_{BA}|}{\overline{AB}}$$

THEN;

$$\boxed{|\underline{a}^{N}_{BA}| = \frac{|\underline{v}_{BA}|^2}{\overline{AB}}}$$

RELATIVE ACCELERATION ANALYSIS

IN ALL THE cases in which the mechanism is in motion, the velocities (linear and angular) shall be solved priory (before) the ~~ac~~ acceleration analysis is done.

EXAMPLE

CRANK SLIDER → IN THE BOOK

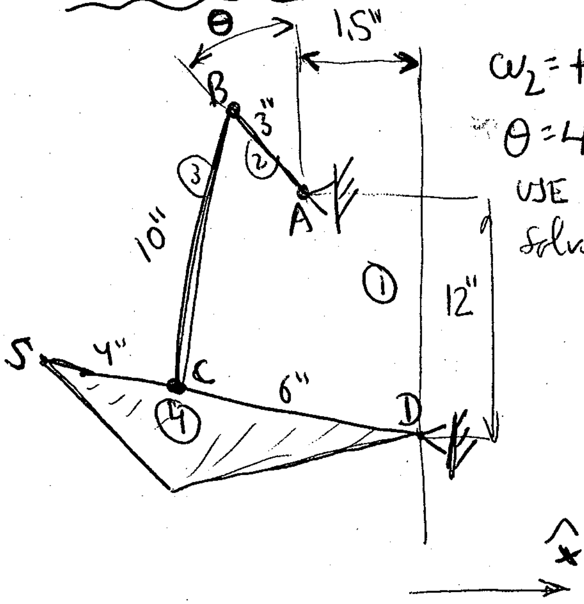

$\omega_2 = +120$ RPM (counterclockwise) ⊕

$\theta = 40°$ ($\theta_2 = 40° + 90 = 130°$) ← RELATIVE TO $\hat{x}$

USE RELATIVE Accelerations method to solve: ① angular velocity OF LINK 4

② angular acceleration OF LINK 4

③ acceleration of point of interest S

7-6

VELOCITIES SOLUTION

VELOCITY IMAGE

$\underline{v}_B = |\omega_2| \cdot \overrightarrow{AB} \angle 220° \; (= \theta_2 + 90°)$

$|\omega_2| = 120 \cdot \frac{2\pi}{60} \frac{rad}{s} = \cancel{25.133} \; 12.5664 \frac{rad}{s}$ A

$\underline{v}_B = 37.6991 \frac{in}{s} \angle 220°$

$\underline{v}_c = \underline{v}_B + \underline{v}_{CB}$

$\perp CD \quad \checkmark \quad \perp CB$

SCALE $1mm = 0.5 \frac{in}{s}$

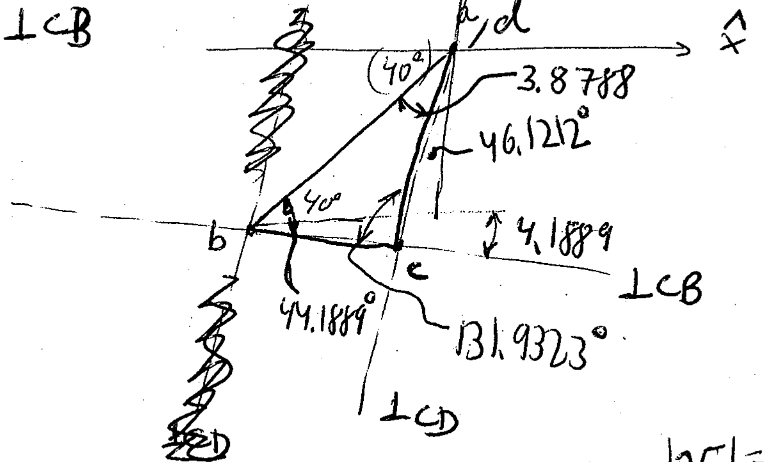

MEASURE:

$|\underline{v}_c| \cong 35 \frac{in}{s}$

$|\underline{v}_{CB}| \cong 3.5 \frac{in}{s}$

$|\underline{v}_c| = \frac{|\underline{v}_b|}{\sin(131.9323)} \cdot \sin 44.1889$

$|\underline{v}_c| = \cancel{70.64457} \; 35.3229 \frac{in}{s}$

$|\underline{v}_{CB}| = \frac{|\underline{v}_b|}{\sin(131.9323)} \cdot \sin 3.8788$

$|\underline{v}_{CB}| = [illegible] \frac{in}{s} = 3.428 \frac{in}{s}$

$\omega_3 = \frac{|\underline{v}_{CB}|}{\overline{BC}} = \frac{3.428}{10} = 0.3428 \frac{rad}{s}$

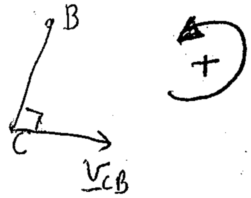

$\omega_4 = \frac{|\underline{v}_c|}{\overline{CD}} = \frac{35.3229}{6} = 5.88715 \frac{rad}{s}$ (+)

7-7

⊛ $\underline{a}_B = \cancelto{0}{\underline{a}_A} + \underline{a}_{BA} = \underline{a}^T_{BA} + \underline{a}^N_{BA} = \alpha \cdot \overline{AB} \angle \perp + \omega_2^2 \overline{AB} \angle \parallel$

$\alpha = 0$

$\omega_2^2 \overline{AB} = 12.5664^2 \cdot 3 = 473.743 \frac{in}{s^2}$

$\underline{a}_B = 473.743 \frac{in}{s^2} \angle (90 + 40 + 180°) = 310°$

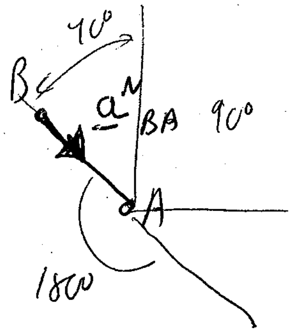

⊛ $\underline{a}_C = \underset{✓}{\underline{a}_B} + \underline{a}_{CB} = \cancelto{0}{\underline{a}_D} + \underline{a}_{CD}$

$\underline{a}_{CB} = \underline{a}^N_{CB} + \underline{a}^T_{CB} = \omega_3^2 \overline{CB} \angle \parallel \overline{CB}, C \to B + \overbrace{\alpha_3}^{?} \cdot \overline{CB} \angle \perp \overline{CB}$

$\omega_3^2 \overline{CB} = 0.3428^2 \cdot 10 = 1.1751 \frac{in}{s^2}$

$\underline{a}_{CD} = \underline{a}^N_{CD} + \underline{a}^T_{CD} = \omega_4^2 \overline{CD} \angle \parallel \overline{CD}, C \to D + \underset{?}{\boxed{\alpha_4}} \overline{CD} \angle \perp \overline{CD}$

$\omega_4^2 \overline{CD} = 5.8872^2 \cdot 6 = 207.9547 \frac{in}{s}$] ?

SCALE
$1\,mm = 5 \frac{in}{s^2}$

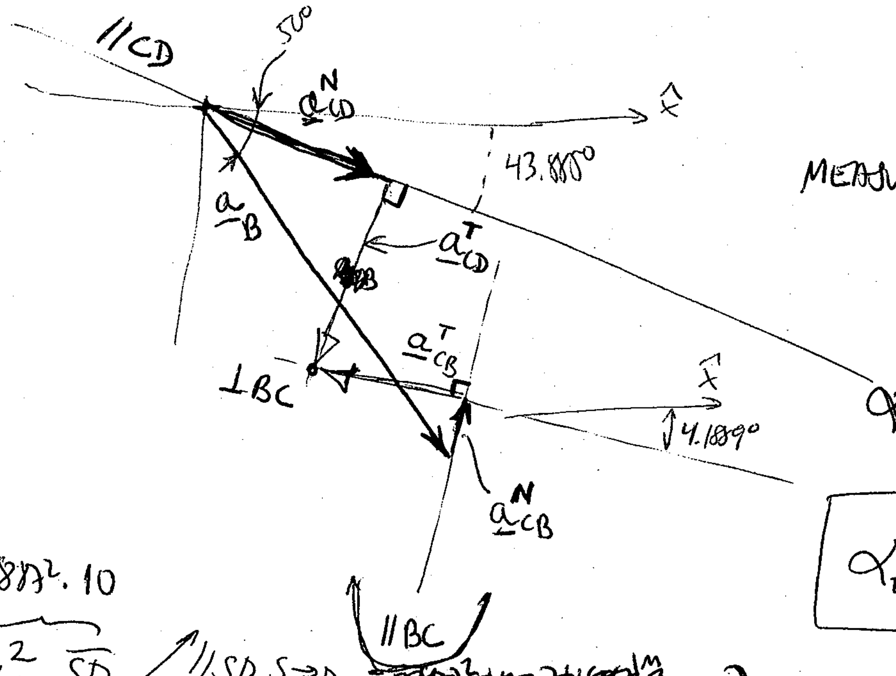

$|\underline{a}^T_{CD}| = \cancel{183.453} \frac{in}{s^2}$ $\boxed{268.2428 \frac{in}{s^2}\ ?}$

MEASURE $|\underline{a}^T_{CB}| = 352.074 \frac{in}{s^2}$

$\alpha_4 = \frac{|\underline{a}^T_{CD}|}{\overline{CD}} = \frac{\overset{268.243}{\cancel{183.453}} \frac{in}{s^2}}{6}$

$\boxed{\alpha_4 = \overset{44.71}{\cancel{30.576}} \frac{rad}{s^2} \circlearrowright}$

$\underline{a}^N_{SD} = \overbrace{\omega_4^2 \overline{SD}}^{5.887^2 \cdot 10} \angle \parallel SD\ S \to D$ ~~= [illegible]~~ $= 346.568 \frac{in}{s^2} \angle 223.9°$

$\underline{a}^T_{SD} = \underbrace{\alpha_4 \cdot \overline{SD}}_{44.71} \angle \perp SD \curvearrowright \alpha = \cancel{305.76} \frac{in}{s^2}$ 447.1 $\angle 133.9°$

$\underline{a}_S = \underline{a}_{SD} = \underline{a}^N_{SD} + \underline{a}^T_{SD}$

$\underline{a}_S = \overset{565.7}{\cancel{[illegible]}} \frac{in}{s^2} \angle 46°$

EXAMPLE ACCELERATION; SLIDER + FLOATING POINT ~~7~~ 8

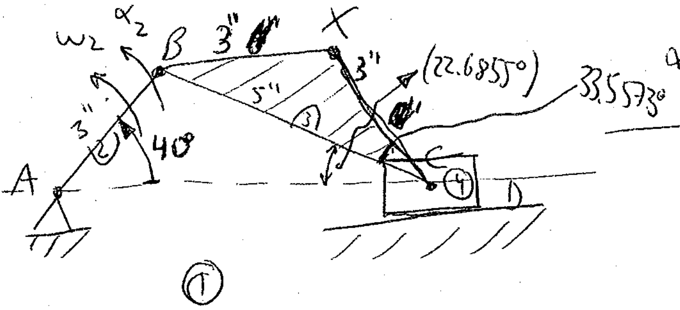

$\omega_2 = 200\,RPM$

$\alpha_2 = 500\,\frac{rad}{s^2}$

a_c - ?

α_3 - ?

$\underline{a}_x$ - ?

a. VELOCITIES

$$\underline{V}_B = \omega_2 \cdot \overline{AB} = \left\{ \underbrace{200 \cdot \frac{2\pi}{60}}_{20.944\,\frac{rad}{s}} \frac{rad}{s} \right\} \cdot 3'' \overset{(\perp \overline{AB} \nwarrow)}{\angle} = 62.832\,\frac{in}{s} \angle 130°$$

VELOCITY IMAGE:

1mm = 1 in/s

$$\underset{/\!/ D}{\underline{V}_c} = \underset{\checkmark}{\underline{V}_B} + \underset{\perp \overline{BC}}{\underline{V}_{CB}}$$

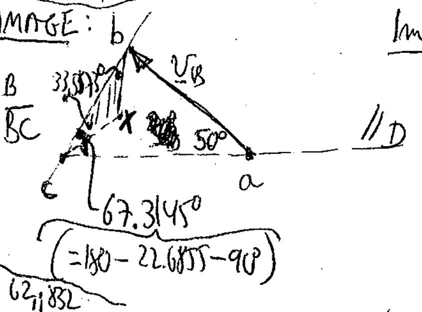

Sines law

$$\frac{|\underline{V}_B|}{\sin 67.3145°} = \frac{|\underline{V}_{CB}|}{\sin 50°} = \frac{|\underline{V}_c|}{\sin(180-50-67.3145°)}$$

$|\underline{V}_c| = 60.5074\,\frac{in}{s}$; $\underline{V}_c = 60.5074\,\frac{in}{s} \angle 180°$

$|\underline{V}_{cB}| = 52.168\,in/s$; $\underline{V}_{CB} = 52.168\,\frac{in}{s} \angle 247.3145°$ $(= 180° + 67.3145°)$

$$\omega_3 = \frac{|\underline{V}_{CB}|}{\overline{CB}} = \frac{52.168\,\frac{in}{s}}{5\,in} = 10.4336\,\frac{rad}{s}\ (\circlearrowleft)$$

b. accelerations

$$\underline{a}_B = \underline{a}_B^N + \underline{a}_B^T = \omega_2^2\,\overline{AB} \angle /\!/\overline{AB} \swarrow + \alpha_2 \overline{AB} \angle \perp \overline{AB} \circlearrowleft$$

$$= 20.944^2 \cdot 3'' \angle \overset{(180°+40)}{\cancel{220}°} + 500 \cdot 3'' \angle 130°$$

$$= 1315.9534\,\frac{in}{s^2} \angle 220° + 1500\,\frac{in}{s^2} \angle 130°$$

$$\underline{a}_B = 1995.428\,\frac{in}{s^2} \angle 171.2606°$$

$\sin\beta = 0.1519$
$\cos\beta = -0.9884$

SCALE 1mm = 40 in/s²

GRAPHICALLY:

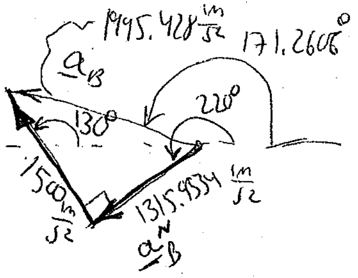

7-9

SCALE 1mm = 40 $\frac{in}{s^2}$

✓

$\underline{a}_C = \underline{a}_B + \underline{a}_{CB}$

$\underline{a}_{CB} = \underline{a}^N_{CB} + \underline{a}^T_{CB}$

✓ ?

$\underline{a}^N_{CB} = \omega_3^2 \cdot \overline{CB} \angle \parallel \overline{CB}$

$= 10.4336^2 \cdot 5'' \angle (180 - 22.6855) = 544.3 \frac{in}{s^2} \angle 157.3145°$

$\underline{a}^T_{CB} = a_{CB} \angle \perp \overline{BC}$

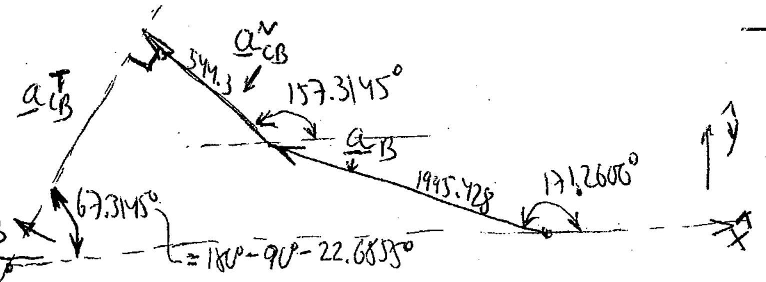

$$\sin 67.3145° = \frac{(1995.428 \cdot \sin 171.2606° + 544.3 \cdot \sin 157.3145°)}{|a^T_{CB}|}$$

(180°-22.6855+90)

$|\underline{a}^T_{CB}| = 556.1328 \frac{in}{s^2}$; $\underline{a}^T_{CB} = 556.1328 \frac{in}{s^2} \angle 247.3145°$

$\boxed{\alpha_3 = \frac{|a^T_{CB}|}{\overline{BC}} = \frac{556.1328}{5} = 111.2266 \frac{rad}{s^2}}$ ⊖ !

$\underline{a}_C = (1995.428 \cdot \cos 171.2668° + 544.3 \cos 157.3145° + 556.1328 \cos 247.3145°) \angle 180°$

$\boxed{\underline{a}_C = 2688.9361 \frac{in}{s^2} \angle 180°}$

FLOATING POINT X ON LINK 3

$\underline{a}_X = \underline{a}_C + \underline{a}_{XC} = \underline{a}_C + \underline{a}^N_{XC} + \underline{a}^T_{XC} = \overset{A}{2688.9361} \frac{in}{s^2} \angle 180° + \overset{B}{326.58} \angle \overset{C}{303.7572°} +$

$+ \overset{D}{333.6798} \angle \overset{E}{33.7572}$

$\underline{a}_C$: ✓

$\underline{a}^N_{XC}$: $\parallel XC$ ↘ $\omega_3^2 \overline{XC}$ $10.4336^2 \cdot 3'' \angle 303.7572°$ $\underset{H}{}$ $(360° - 22.6855° - 33.5573°)$

$\underline{a}^T_{XC}$: $\perp XC$ ↗ $\alpha_3 \overline{XC}$ $111.2266 \cdot 3'' \angle 90 - 33.5573 - 22.6855$

(or
$\underline{a}_X = \underline{a}_B + \underline{a}_{XB}$

$= \underline{a}_B + \underline{a}^N_{XB} + \underline{a}^T_{XB}$

$= \underline{a}_B + \omega_3^2 \overline{XB} \angle \parallel \overline{XB} + \alpha_3 \overline{XB} \angle \perp \overline{XB}$)

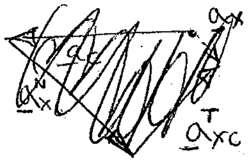

SCALE 1mm = 40 in/s²

$\underline{a}_X = -2230.04254\hat{x} - 86.1011\hat{y} = 2231.7 \frac{in}{s^2} \angle$ ~~262.29°~~ 182.211°

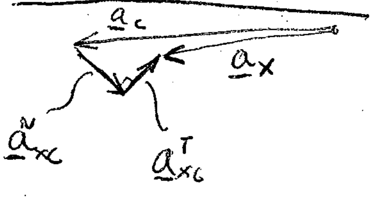

✓

7-10

acceleration image of the mechanism

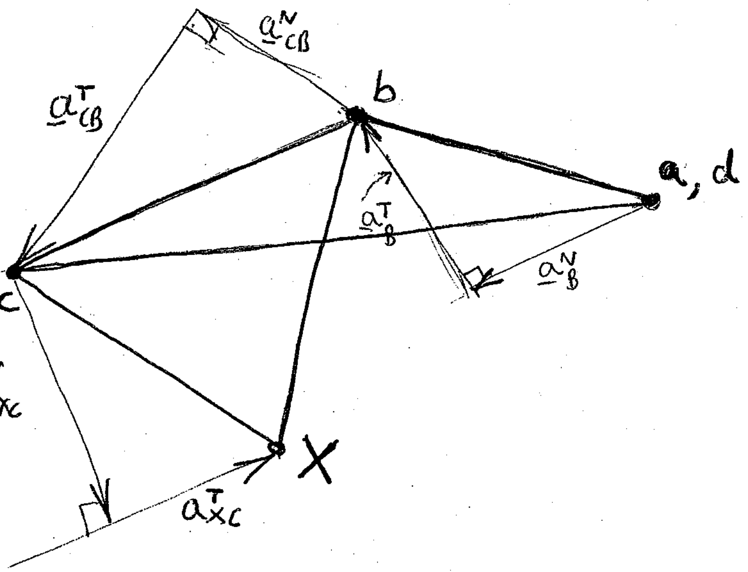

The vectors used to draw the acceleration image:

$\underline{a}^N_B = 1315.95 \frac{in}{s^2} \angle 220°$

$\underline{a}^T_B = 1500 \frac{in}{s^2} \angle 130°$

$\underline{a}^N_{CB} = 544.3 \frac{in}{s^2} \angle 157.3°$

$\underline{a}^T_{CB} = 556.1 \frac{in}{s^2} \angle 247.3°$

$\underline{a}^N_{XC} = 326.6 \frac{in}{s^2} \angle 303.8°$

$\underline{a}^T_{XC} = 333.7 \frac{in}{s^2} \angle 33.8°$

FLOATING SLIDER (NOT A PART OF THE FRAME)

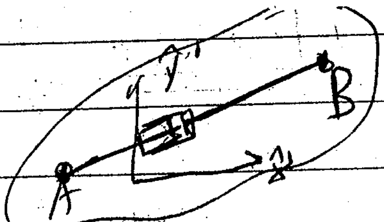

$\underline{r}_{BA}, \underline{v}_{BA}, \underline{a}_{BA}$

ON A COORDINATE SYSTEM ATTACHED TO $\overline{AB}$

r_{BA} is not constant

$\ddot{\underline{r}}_{BA}$

$= a_{BA}$

$$\underline{v}_{BA} = \frac{\partial r_{BA}}{\partial t} + \underline{\Omega} \times \underline{r}_{BA}$$

$$= \dot{\underline{r}}_{BA} + \underline{\Omega} \times \underline{r}_{BA}$$

$$\underline{a}_{BA} = \frac{\partial \underline{v}_{BA}}{\partial t} + \underline{\Omega} \times \underline{v}_{BA}$$

$$= \ddot{\underline{r}}_{BA} + \dot{\underline{\Omega}} \times \underline{r}_{BA} + 2\underline{\Omega} \times \dot{\underline{r}}_{BA} + \underline{\Omega} \times (\underline{\Omega} \times \underline{r}_{BA}) = \underline{a}^N_{BA}$$

actuator acceleration

$\underline{a}^T_{BA}$

$\alpha r_{BA} \angle \perp BA$

~~CURIOUS~~ CORIOLIS ACCELERATION $\underline{a}^C_{BA}$

CENTRIFUGAL ~~ACCELERATION~~

$\underline{\Omega} = \underline{\omega}$ (2D)

$a_{BA} = \ddot{r}_{BA} + \underline{a}^T_{BA} + a^C_{BA} + a^N_{BA}$

SLIDER ACCELERAT MAGNIT

$\ddot{r}_{BA}$

$= \ddot{r}_{BA} \angle \parallel BA$

$\underline{\Omega} \times \dot{r}_{BA}$

$\angle \perp AB$

$= \omega \cdot \dot{r}_{BA}$

SLIDER VELOCITY MAGNITUDE

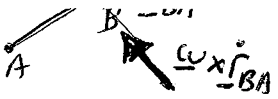

EXAMPLE

$$\ddot{\underline{r}}_{BA} = \ddot{r}_{BA} \angle \parallel \overline{BA}$$

$$\underline{a}^{T}_{BA} = \alpha \cdot \overline{BA} \angle \perp \overline{BA}$$

$$\underline{a}^{N}_{BA} = \omega^2 \overline{BA} \angle \parallel \overline{BA}$$

$$\underline{a}^{C}_{BA} = 2\underline{\omega} \times \dot{\underline{r}}_{BA} =$$

$$= 2\omega \cdot \dot{r}_{BA} \angle \perp BA$$

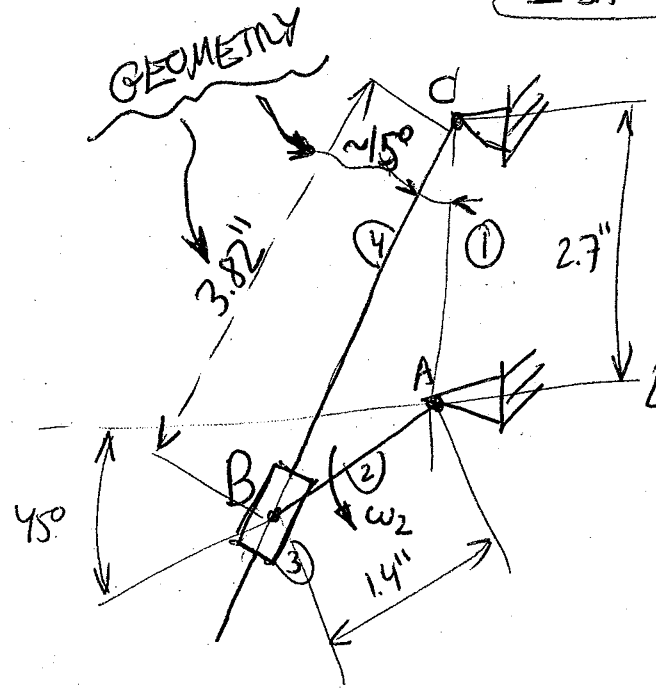

$\omega_2 = 400$ RPM ccw $\left(= 41.888 \frac{rad}{s}\ \circlearrowleft\right)$

$\alpha_2 = 0$

$\alpha_4 = ?$

Linear acceleration between links 3 & 4 -?

4 LINK MECH. WITH A FLOATING SLIDER

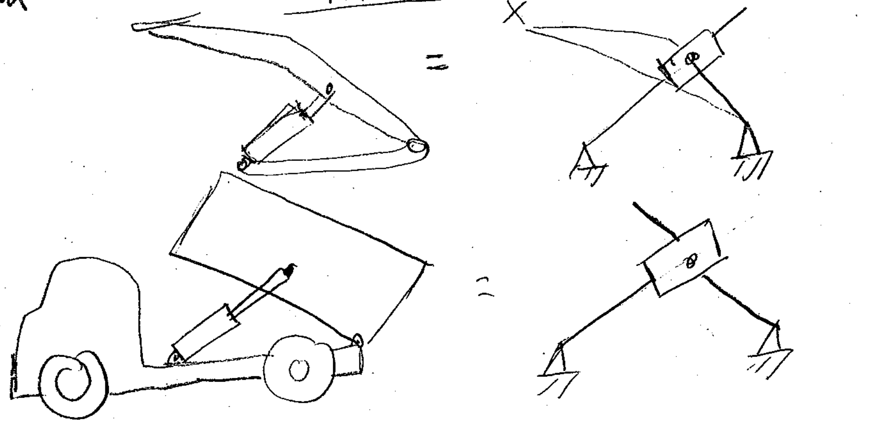

Velocities

$$\underline{V}_{B_4} = \underline{V}_{B_2} + \underline{V}_{B_4 B_2}$$

$$\underline{V}_{B_2} = \omega_2 \overline{AB} \angle \cancel{315} AB = 41.888 \cdot 1.4'' \angle 315° = 58.6 \angle 315°$$

$$\underline{V}_{B_4} = \overset{?}{\omega_4} \overline{BC} \angle \perp \overline{BC}$$

$$\underline{V}_{B_4 B_2} = \dot{r} \angle \parallel \overline{BC}$$

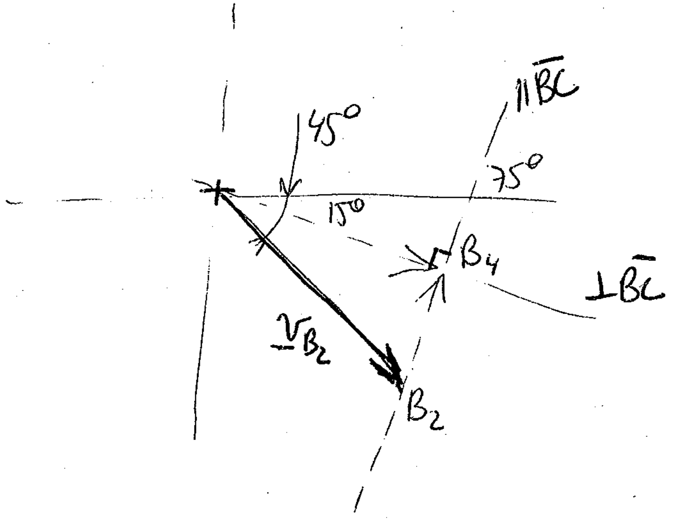

SOLUTION.

$$\underline{V}_{B_4} = 50.8 \frac{in}{s} \angle 315°$$

$$\underline{V}_{B_4 B_2} = 29.3 \frac{in}{s} \angle 75°$$

$$\dot{r} = 29.3 \frac{in}{s}$$

7-12

$$\omega_4 = \frac{|v_{B_4}|}{\overline{BC}} = \frac{50.8\,\frac{in}{s}}{3.82''} = 13.3\,\frac{rad}{s} \circlearrowleft + \;(ccw)$$

accelerations

OPTION # 1

$$\underline{a}_{B_4} = \underline{a}_{B_2} + \underline{a}_{B_4B_2}$$

✓ $\underline{a}_{B_2} = \underline{a}^N_{B_2} + \underline{a}^T_{B_2} = \omega_2^2\,\overline{AB} \angle \parallel \overline{AB} + \cancelto{0}{\alpha_2}\,\overline{AB} \angle \perp \overline{AB} = 41.9^2 \cdot 1.4'' \angle 45^\circ$
$= 2456.45\,\frac{in}{s^2} \angle 45^\circ$

D $\underline{a}_{B_4} = \underline{a}^N_{B_4} + \underline{a}^T_{B_4} = \omega_4^2\,\overline{BC} \angle \parallel \overline{BC} + \alpha_4 \cdot \overline{BC} \angle \perp \overline{BC} = 13.3^2 \cdot 3.82'' \angle 75^\circ + a^T_{B_4} \angle \perp \overline{BC}$
$= 675.4\,\frac{in}{s^2} \angle 75^\circ + a^T_{B_4} \angle \perp \overline{BC}$

$\underline{a}_{B_4B_2} = \ddot{\underline{r}}_{B_4B_2} + \underline{a}^T_{B_4B_2} + a^C_{B_4B_2} + \underline{a}^N_{B_4B_2}$ COORDINATE SYSTEM ATTACHED TO LINK 4

D $\ddot{\underline{r}}_{B_4B_2} = \ddot{r}_{B_4B_2} \angle \parallel \overline{B_4B_2}$

✓ $\underline{a}^T_{B_4B_2} = \cancelto{0}{\alpha_4}\,\overline{B_4B_2} \angle \perp \overline{B_4B_2} = 0$

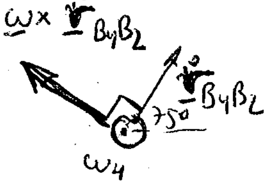

✓ $\underline{a}^C_{B_4B_2} = 2\omega_4\,\dot{r}_{B_4B_2} \angle \perp \overline{B_4B_2} = 2 \cdot 13.3 \cdot 29.3 \angle 165^\circ = 779.4 \angle 165^\circ$

✓ $\underline{a}^N_{B_4B_2} = \omega_4^2\,\cancelto{0}{\overline{B_4B_2}} \angle \parallel \overline{B_4B_2} = 0$

7-13

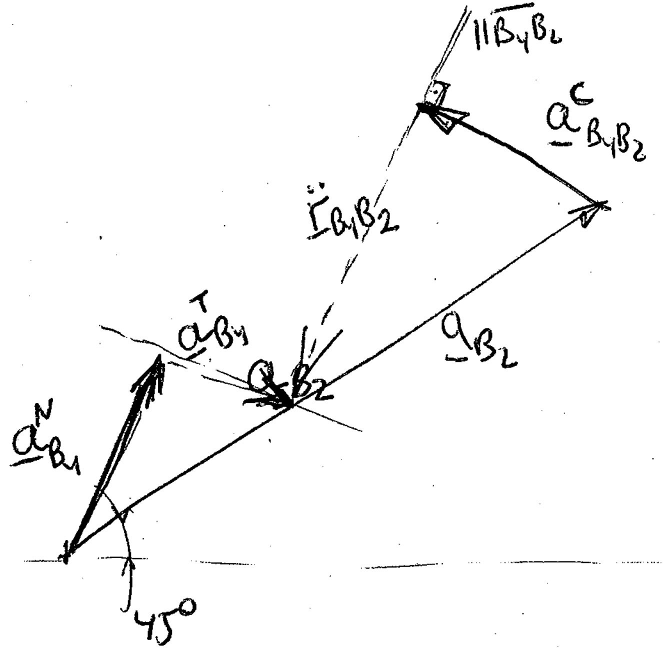

SOLUTION:

$\ddot{\underline{r}}_{B_4B_2} = 1452.3 \frac{in}{s^2} \angle 255°$

$\underline{a}^T_{B_4} = 448.3 \frac{in}{s^2} \angle 345°$

$$\ddot{r} = |\ddot{\underline{r}}_{B_4B_2}| = 1452.3 \frac{in}{s^2}$$

$$\alpha_4 = \frac{|\underline{a}^T_{B_4}|}{\overline{BC}} = \frac{448.3 \frac{in}{s^2}}{3.82''} = 117.3 \frac{rad}{s^2} \circlearrowleft + \text{ ccw}$$

OPTION # 2

B₂ & C are two points in the slider,
C IS A STATIC POINT, SO:

$$\underline{a}_{B_2C} = \ddot{\underline{r}}_{B_2C} + \underline{a}^T_{B_2C} + \underline{a}^c_{B_2C} + \underline{a}^N_{B_2C} = \underline{a}_{B_2} = 2456.5 \frac{in}{s^2} \angle 45°$$

$$\ddot{\underline{r}}_{B_2C} = \overset{2}{\ddot{r}}_{B_2C} \angle \parallel \overline{BC}$$

$$\underline{a}^T_{B_2C} = \overset{2}{\alpha}_4 \overline{BC} \angle \perp BC$$

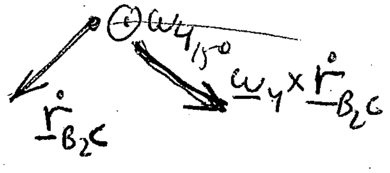

$$\underline{a}^c_{B_2C} = 2\omega_4 \dot{r}_{B_2C} \angle \perp \overline{BC} = 2 \cdot 13.3 \cdot 29.3 \angle 345° = 779.3 \frac{in}{s^2} \angle 345°$$

$$\underline{a}^N_{B_2C} = \omega_4^2 \overline{BC} \angle \parallel \overline{BC} = 13.3^2 \cdot 3.82'' \angle 75° = 6754 \frac{in}{} \angle 75°$$

7-14

(THE SAME DIAGRAM AS IN THE TEXTBOOK)

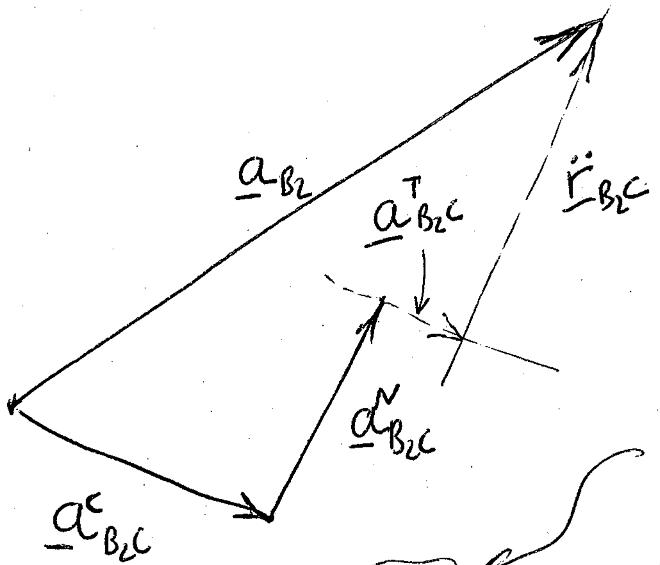

$$\ddot{\underline{r}}_{B_2C} = 1452{,}3\,\frac{m}{s^2}\angle 75^\circ$$

$$\underline{a}^T_{B_2C} = 448{,}3\,\frac{m}{s^2}\angle 345^\circ$$

compare with the solution option #1

$$\alpha_4 = \frac{|\underline{a}^T_{B_2C}|}{BC} = \dots = 117{,}3\,\frac{rad}{s^2} \circlearrowright$$

7-14

Numerical Differentiation

Richardson Method:

$$a_i = \left[\frac{v_{i+1}-v_{i-1}}{2\Delta t}\right] - \left[\frac{v_{i+2}-2v_{i+1}+2v_{i-1}-v_{i-2}}{12\Delta t}\right]$$

i = data point index

v_i = Velocity at data point i

$\Delta t = t_2 - t_1 = t_3 - t_2 = \ldots = t_{n+1} - t_n$ = constant!

i	(s) t	v_i [m/s]	a_i [m/s²]
1	0.2	-2.97	—
2	0.3	-4.34	—
3	0.4	-5.58	-11.5
4	0.5	-6.65	-9.69
5	0.6	-7.52	—
6	0.7	-8.16	—

~~Homework~~:

EQUIVALENT LINKAGES

WE Dealed untill now only with primary joints (pin joints, slider), didn't use gears, cams.

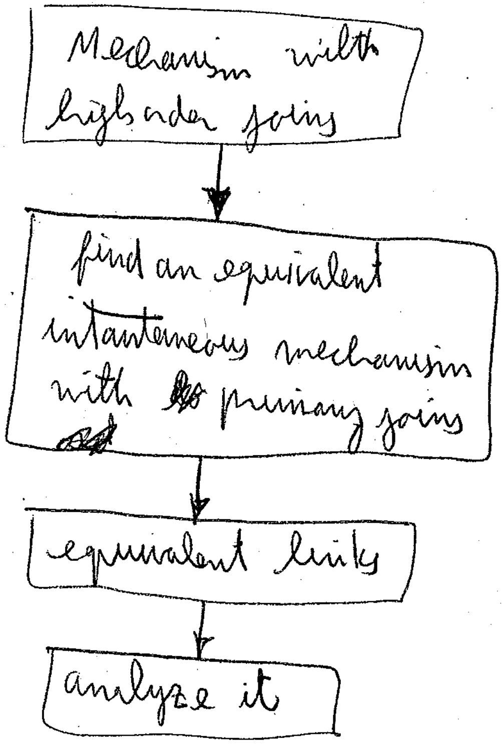

CAMS

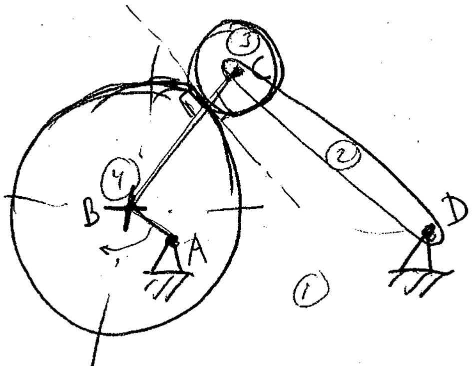

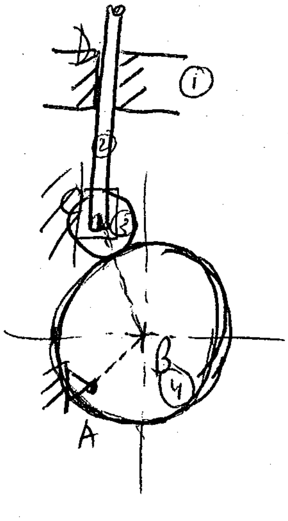

n = 4

jp = 3

jh = 1

↖ DOF = 3(4-1) - 2·3 - 1 = 2 →

(*) -2

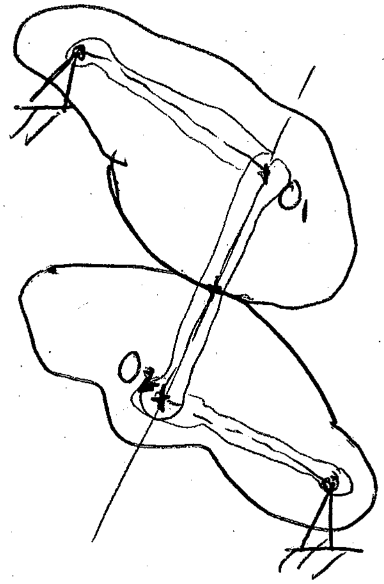

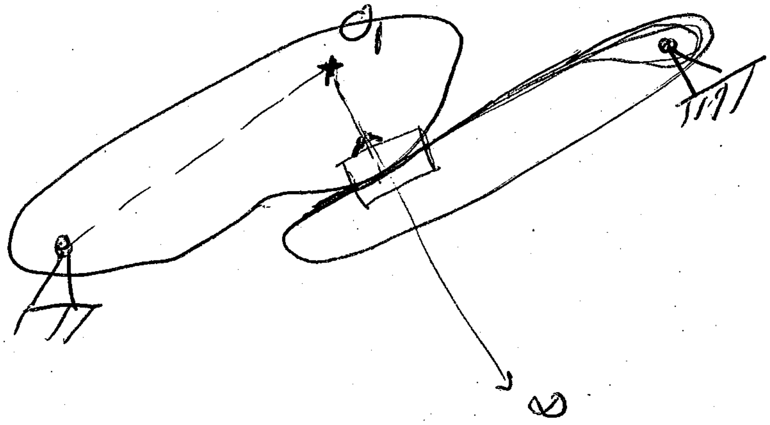

CHAPTER 9 - CAMS: DESIGN & KINEMATIC ANALYSIS

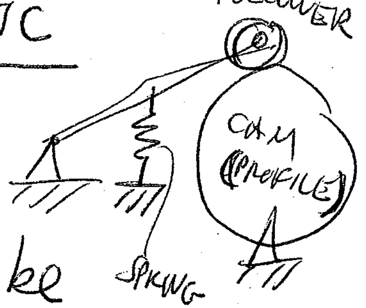

Any Desired Motion Program can be exactly reproduced by a Cam

disadvantages of cams:

- manufacturing expense
- poor wear resistence
- poor high-speed capability
- noise
- need for dynamic optimization and balance

Some types of cams and followers;

CAMS: PLATE/DISK/RADIAL; CYLINDRICAL/DRUM, LINEAR MOTION (LINEAR, PIVOTED)
FOLLOWER: SHAPE, POSITION

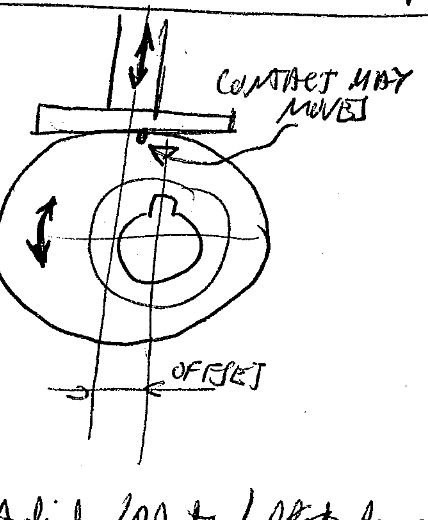

RAdial / Plate / ~~flat faced~~ cam
flat-faced follower
offset

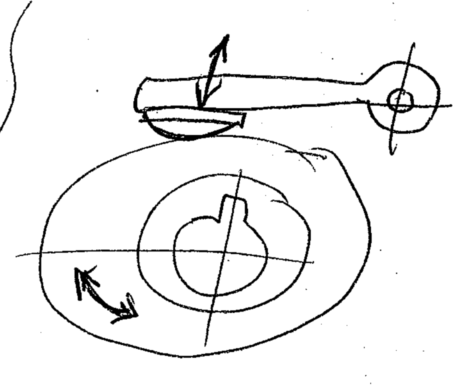

Radial / Plate cam
spherical-faced oscillating follower
(pivoted)

9-2

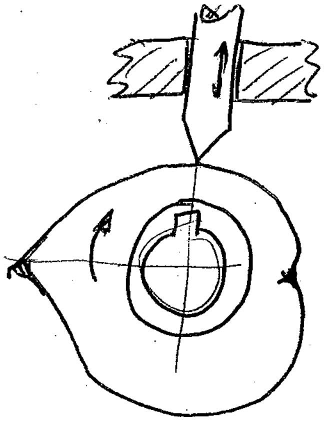

Radial Cam
tanslating, knife-edged follower
IN LINE

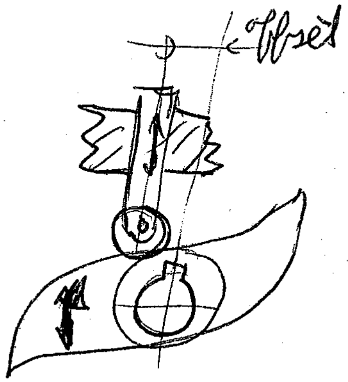

Radial two-lobe cam
(tanslating) offset, roller follower

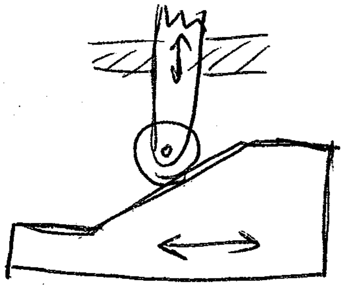

Wedge /linear Cam
(tanslating) roller follower

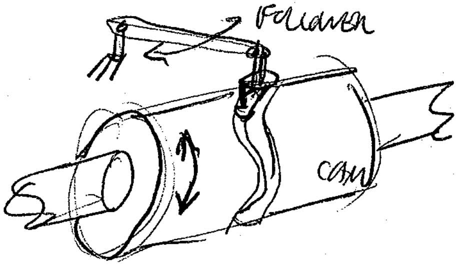

CYLINDRICAL CAM
OSCILLATING ROLLER FOLLOWER
(PIVOTING)

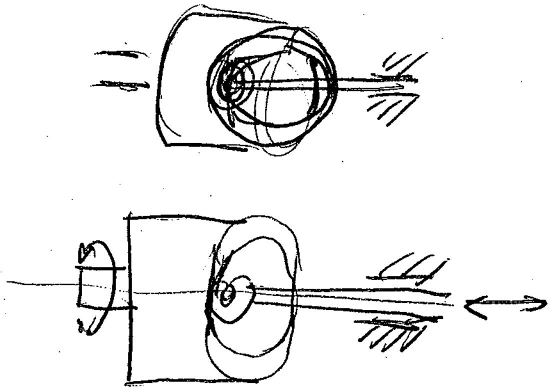

Face cam
translating roller follower

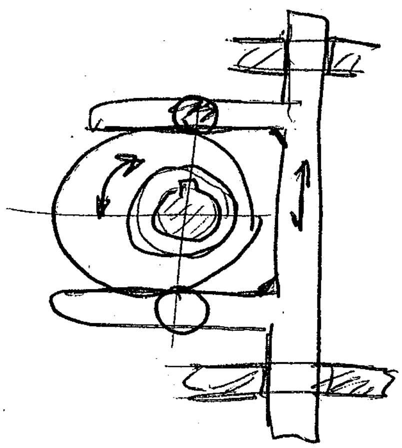

YOKE CAM

9-3'

Input = cam
Output = follower

Displacement Diagram

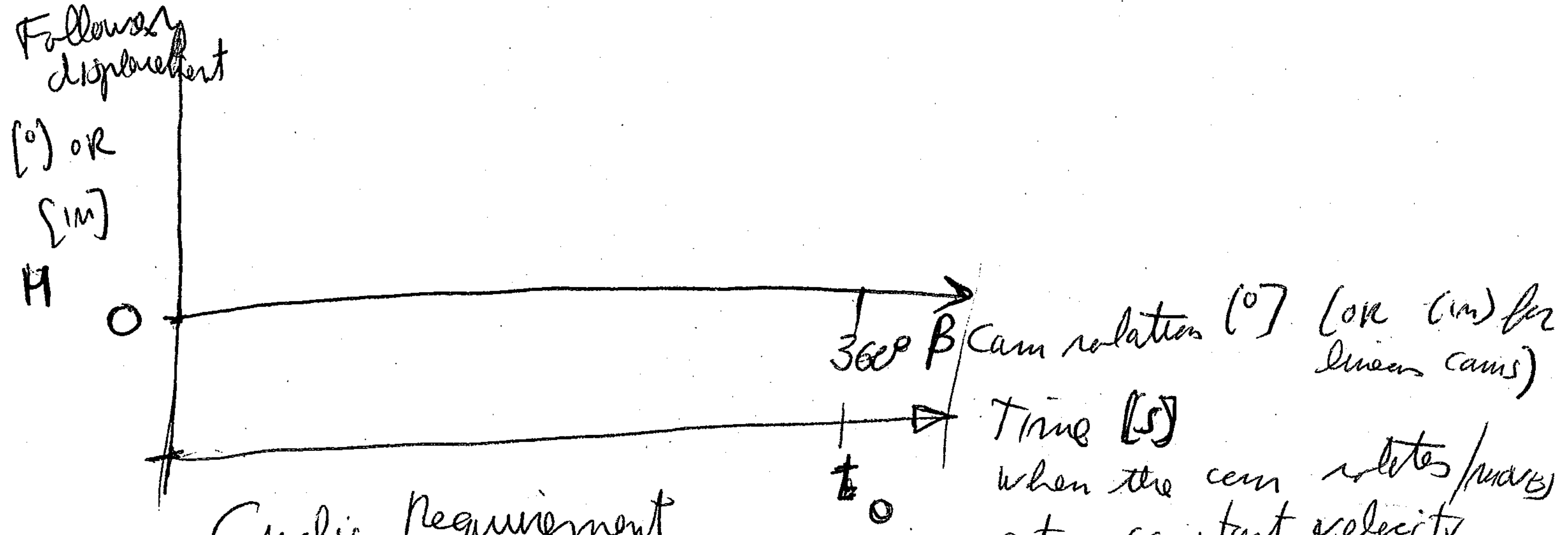

Cyclic Requirement

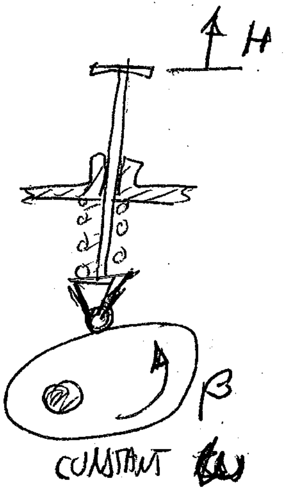

Let assume the following motion sequence:

1. Rise H_1 in t_1 How?
2. Dwell for t_2 ✓
3. Return H_3 in t_3 How?
4. ~~Rise~~ Dwell t_4 ✓
5. Return H_5 in t_5

CYCLIC REQUIREMENT

check that the last point ($\beta = 360°$): the follower is placed at the same height/position Check:

$H_1 - H_3 - H_5 = 0 \rightsquigarrow H_5 = H_1 - H_3$

9-4

The total time: $t_0 = t_1 + t_2 + t_3 + t_4 + t_5$ [s]

Assuming a constant angular velocity for the cam:

$$\omega = \frac{2\pi}{t_0}\left[\frac{rad}{s}\right] = \frac{360}{t_0}\left[\frac{°}{s}\right]$$

the rotation of the cam in the different intervals

$\beta_1 = \omega t_1$ [illegible] PREFERED IN [°]

$\beta_2 = \omega t_2$

⋮

$\beta_5 = \omega t_5$

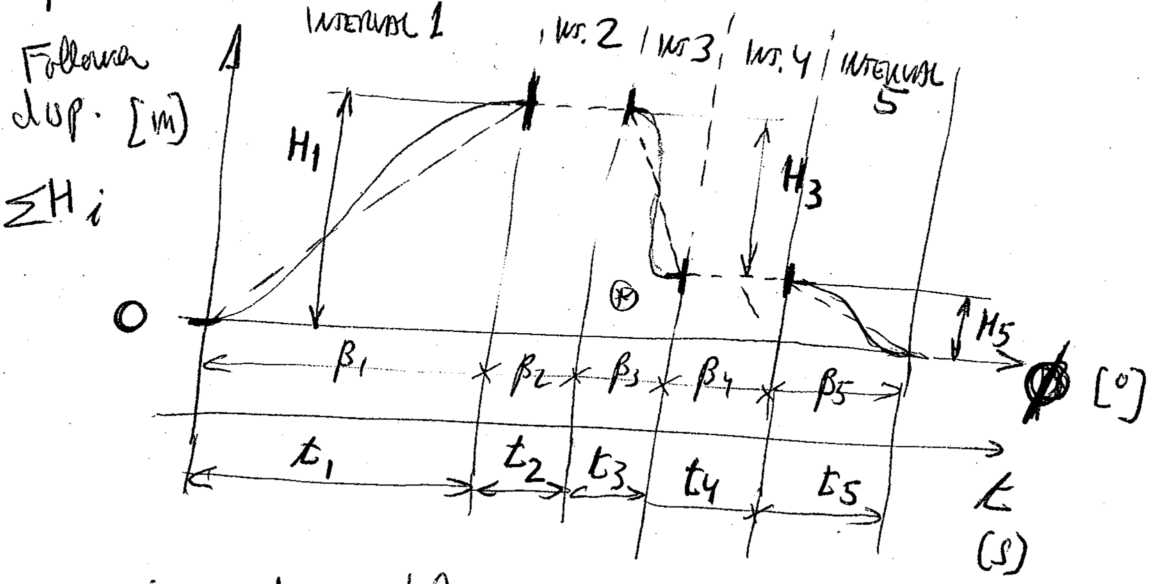

Hi speed problems

High slopes problems

Next

We are going to learn about the different shapes for the rising and returning intervals

9-5

Analyses of different types of follower displacement functions

~~assum~~

we are going to assume (CAM) constant velocity ω,

so $y = y(\cancel{t}) = \cancel{[illegible]} = y(\phi)$

~~$\beta = \beta_0 + \omega t$~~ $\phi = \phi_0 + \omega t$

then:

the follower velocity $= \dot{y} = \frac{dy(\phi)}{\partial t} = \frac{dy}{d\phi} \cdot \frac{d\phi}{dt} = y' \cdot \omega$

the follower acceleration: $\ddot{y} = \frac{d^2 y(\phi)}{dt^2} = \frac{d}{dt}\left(\frac{dy}{d\phi}\frac{d\phi}{dt}\right)$

$$= \frac{d^2 y}{d\phi^2}\left(\frac{d\phi}{dt}\right)^2 + \frac{dy}{d\theta}\overset{0}{\frac{d^2\phi}{dt^2}}$$

ω=constant

$$\ddot{y} = y''\omega^2$$

the follower jerk: $\dddot{y} = y'''\omega^3$

example $y = a\phi^2$

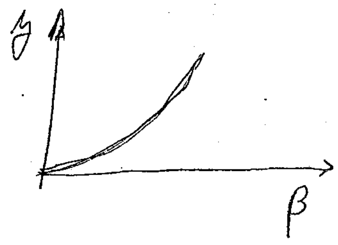

$y' = 2a\phi \rightarrow \dot{y} = 2a\beta\phi$

$y'' = 2a \longrightarrow \ddot{y} = 2a\phi^2$

$y''' = 0 \longrightarrow \dddot{y} = 0$

9-6

Constant velocity / Uniform motion follower

	General function	RISE	RETURN
Displacement :	$y = C_0 + C_1\phi$ (ΔR in the book)	$y = \frac{H_i(t-t_0)}{t_i} = \underset{C_1}{\frac{H_i}{\beta_i}}(\phi-\phi_0)$	$y = H_i - \frac{H_i(t-t_0)}{t_i}$ $= H_i - \frac{H_i}{\beta_i}(\phi-\phi_0)$
Velocity	$\dot{y} = y'\omega$ $= C\cdot\omega$	$v = \dot{y} = \frac{H_i}{\beta_i}\omega$ $(= \frac{H_i}{t_i})$	$-\frac{H_i}{\beta_i}\omega \left(= -\frac{H_i}{t_i}\right)$
	$\ddot{y} = y''\omega^2$ $= 0$	$a = \ddot{y} = 0$	0

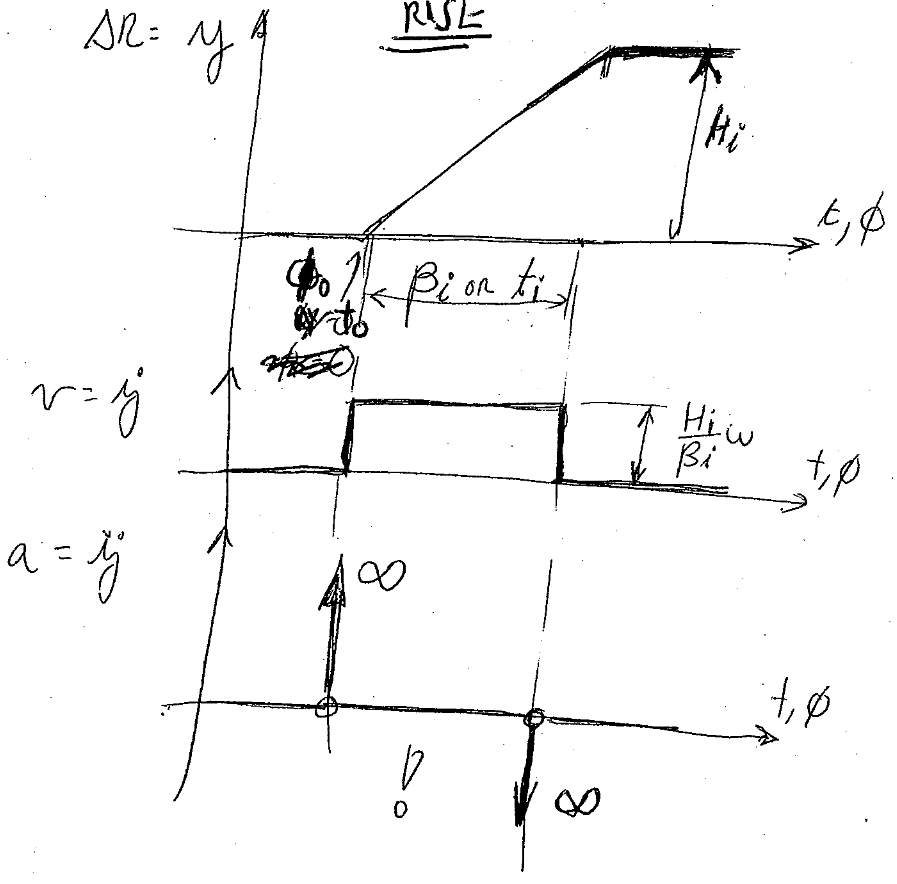

9-7

Parabolic Motion / constant acceleration

In order to have similar magnitudes of positive and negative accelerations The interval is divided into two sections: the first one ($0 \leq \phi \leq 0.5\beta$ or $0 \leq t \leq 0.5 t_i$) - RISE: a possitive constant acceleration is needed and the second section: ($0.5\beta \leq \phi \leq \beta$ or $0.5 t_i \leq t \leq t_i$) - RETU a negative constant acceleration is applied.

the general equation for $y = C_0 + C_1\phi + C_2\phi^2$

$$\dot{y} = y'\omega = (C_1 + 2C_2\phi)\omega$$

THREE INPUTS NEEDED TO DEFINE $y(\phi)$

$$\ddot{y} = y''\omega^2 = 2C_2\omega^2 \leftarrow \text{constant acceleration}$$

$$\text{JERK} \rightarrow \dddot{y} = y'''\omega^3 = 0$$

~~$0 \leq \phi \leq \frac{1}{2}\beta$~~ ~~RISE~~ ~~DISPLACEMENT~~

~~$\dot{y}(\phi_0) = 0$~~

~~$y(\phi_0) = 0$~~

~~$y(\phi_0 + \frac{1}{2}\beta_i) = \frac{1}{4}H_i$~~

~~$y = 2\frac{H_i}{\beta_i^2}(\phi - \phi_0)^2$~~

~~RETURN~~ [illegible]

~~$\dot{y}(\phi_0 + \beta_i) = 0$~~

~~$y(\phi_0 + \frac{1}{2}\beta_i) = \frac{1}{2}H_i$~~

~~$y(\phi_0 + \beta_i) = 0$~~

$$\frac{\phi - \phi_0}{t - t_0} = \frac{\Delta\phi}{\Delta t} = \omega = \frac{\beta_i}{t_i}$$

$$\boxed{\frac{\phi - \phi_0}{\beta_i} = \frac{t - t_0}{t_i}}$$

Angle axis may be replaced by time axis

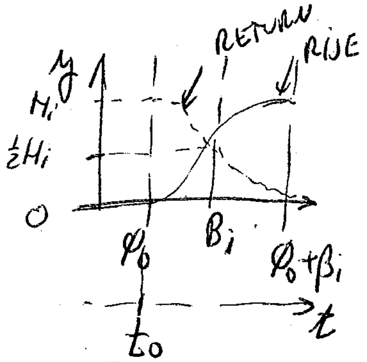

9-8

IN ORDER TO SWITCH TO TIM

$(\phi - \phi_0) = \frac{\beta_i}{t_i}(t - t_0)$ $\beta_i = \omega t_i$

		RISE	RETURN (FALL)
$\phi_0 < \phi \leq \frac{1}{2}\beta_i + \phi_0$	DISPLACEMENT	$\dot{y}(\phi_0) = 0$ $y(\phi_0) = 0$ $y(\phi_0 + \frac{1}{2}\beta_i) = \frac{1}{2}H_i$ ↓ $y = 2\frac{H_i}{[illegible]}\left(\frac{\phi - \phi_0}{\beta_i}\right)^2$	$\dot{y}(\phi_0) = 0$ $y(\phi_0) = H_i$ $y(\phi_0 + \frac{1}{2}\beta_i) = \frac{1}{2}H_i$ ↓ $y = H_i - \frac{2H_i}{[illegible]}\left(\frac{\phi - \phi_0}{\beta_i}\right)^2$
	velocity	$\dot{y} = \frac{4\omega H_i}{\beta_i^2}\left(\frac{\phi - \phi_0}{[illegible]}\right)$	$\dot{y} = -\frac{4\omega H_i}{\beta_i^2}(\phi - \phi_0)$
	acceleration	$\ddot{y} = +\frac{4\omega^2 H_i}{\beta_i^2}$	$\ddot{y} = -\frac{4\omega^2 H_i}{\beta_i^2}$
	JERK	0	0
$\beta_i + \phi_0 \leq \phi < \phi_0 + \beta_i$	displacement	$\dot{y}(\phi_0 + \beta_i) = 0$ $y(\phi_0 + \frac{1}{2}\beta_i) = \frac{1}{2}H_i$ $y(\phi_0 + \beta_i) = H_i$ ↓ $y = H_i - 2H\left[1 - \left(\frac{\phi - \phi_0}{\beta_i}\right)\right]^2$	$\dot{y}(\phi_0 + \beta_i) = 0$ $y(\phi_0 + \frac{1}{2}\beta_i) = \frac{1}{2}H_i$ $y(\phi_0 + \beta_i) = 0$ ↓ $y = 2H\left[1 - \left(\frac{\phi - \phi_0}{\beta_i}\right)\right]^2$
	velocity	$\dot{y} = \frac{4H_i\omega}{\beta_i}\left[1 - \frac{(\phi - \phi_0)}{\beta_i}\right]$	$\dot{y} = -\frac{4H_i\omega}{\beta_i}\left[1 - \frac{(\phi - \phi_0)}{\beta_i}\right]$
	acceleration	$\ddot{y} = -\frac{4H_i\omega^2}{\beta_i^2}$	$\ddot{y} = +\frac{4H_i\omega^2}{\beta_i^2}$

9-9

~~For the constant acceleration rise~~

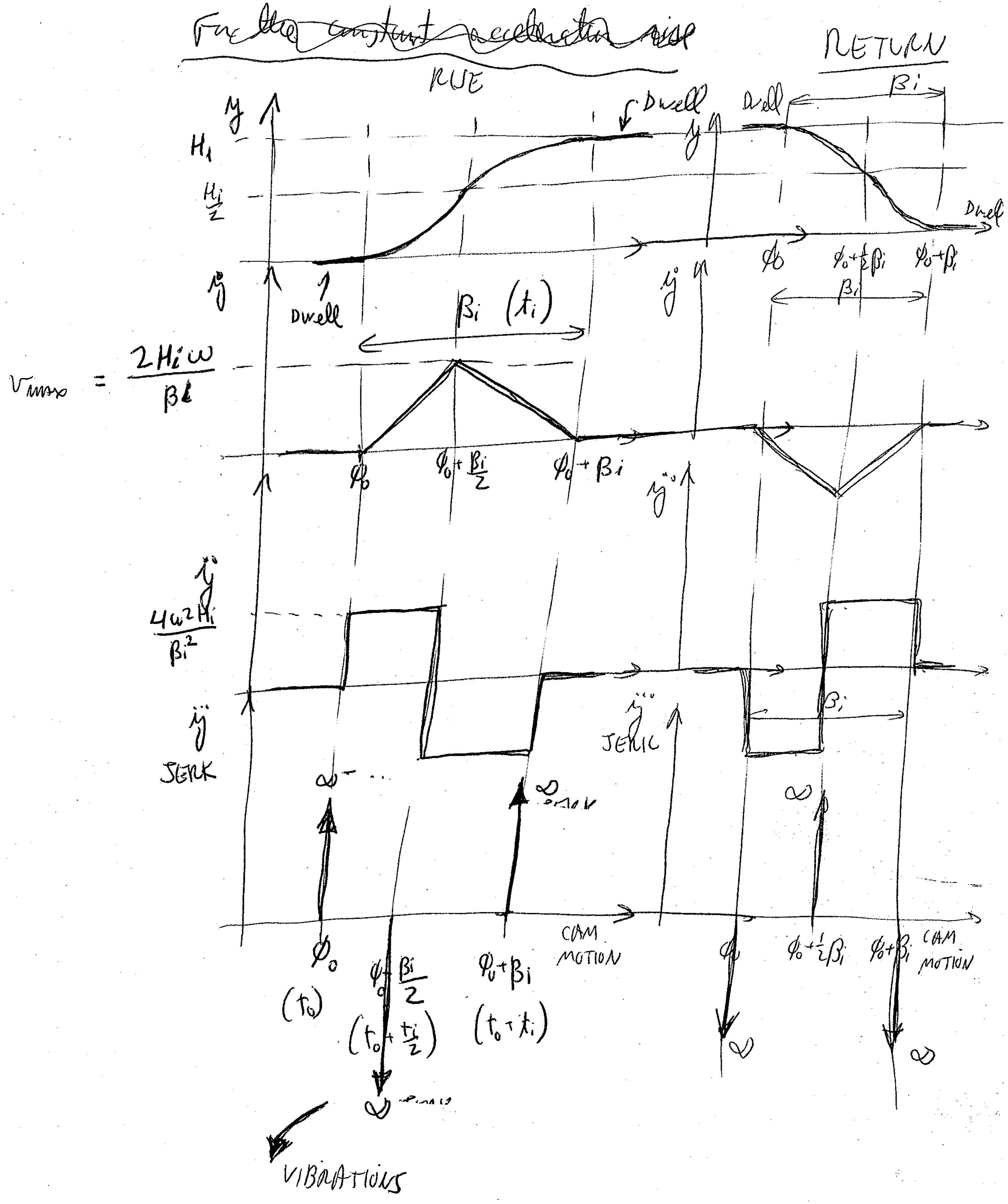

9-10

Harmonic follower - Displacement

~~Harmonic motion is generated by an offset (eccentric) circular cam~~

for the basic simple harmonic motion:

$$y = C_0 + C_1 \cos C_2 \phi = C_0\left(1 + \frac{C_1}{C_0} \cos C_2 \phi\right)$$

$$\dot{y} = y'\omega = -C_1 C_2\, \omega \sin(C_2\phi)$$

$$\ddot{y} = -C_1 C_2^2 \omega^2 \cos(C_2\phi)$$

$$\dddot{y} = C_1 C_2^3 \omega^3 \sin(C_2\phi)$$

$$\phi = \phi' - \phi_0$$

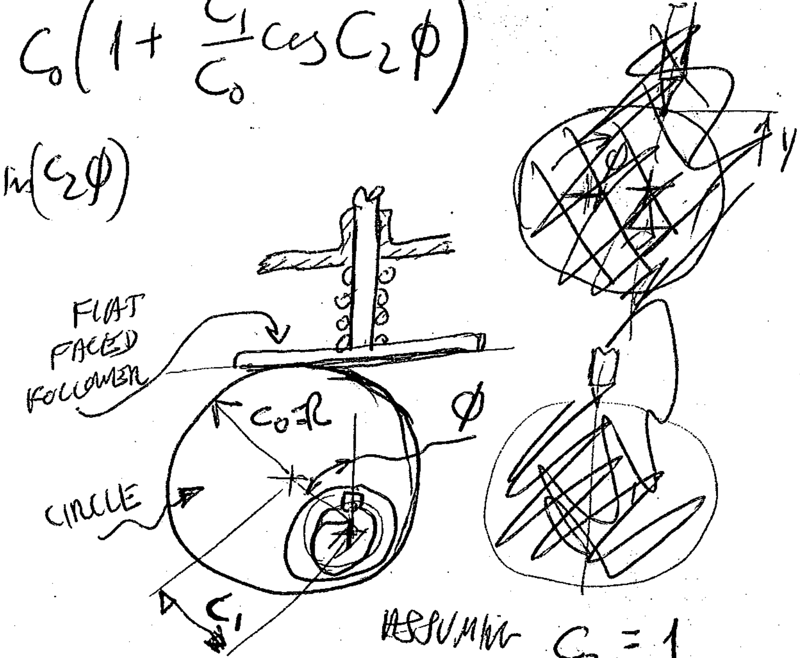

ASSUMING $C_2 = 1$

	Rise	Return
Displacement	$y(0) = 0$ | $\dot{y}(0) = 0$ $y(\beta_i) = H$ | $\dot{y}(\beta_i) = 0$ $y = H_i/2\left(1 - \cos\frac{\pi\phi}{\beta_i}\right)$	$\frac{H_i}{2}\left(1 + \cos\frac{\pi\phi}{\beta_i}\right)$
Velocity	$\dot{y} = \frac{\pi H_i \omega}{2\beta_i} \sin\left(\frac{\pi\phi}{\beta_i}\right)$	$-\dot{y}_{RISE}$
acceleration	$\ddot{y} = \frac{\pi^2 H_i \omega^2}{2\beta_i^2} \cos\left(\frac{\pi\phi}{\beta_i}\right)$	$-\ddot{y}_{RISE}$
JERK	$\dddot{y} = \frac{-\pi^3 H_i \omega 3}{2\beta^3} \sin\left(\frac{\pi\phi}{\right.$	$-\dddot{y}_{RISE}$

$$\boxed{\phi = \omega t = \frac{\beta_i}{t_i} t}$$

$$\boxed{\beta_i = \omega t_i}$$

9-11

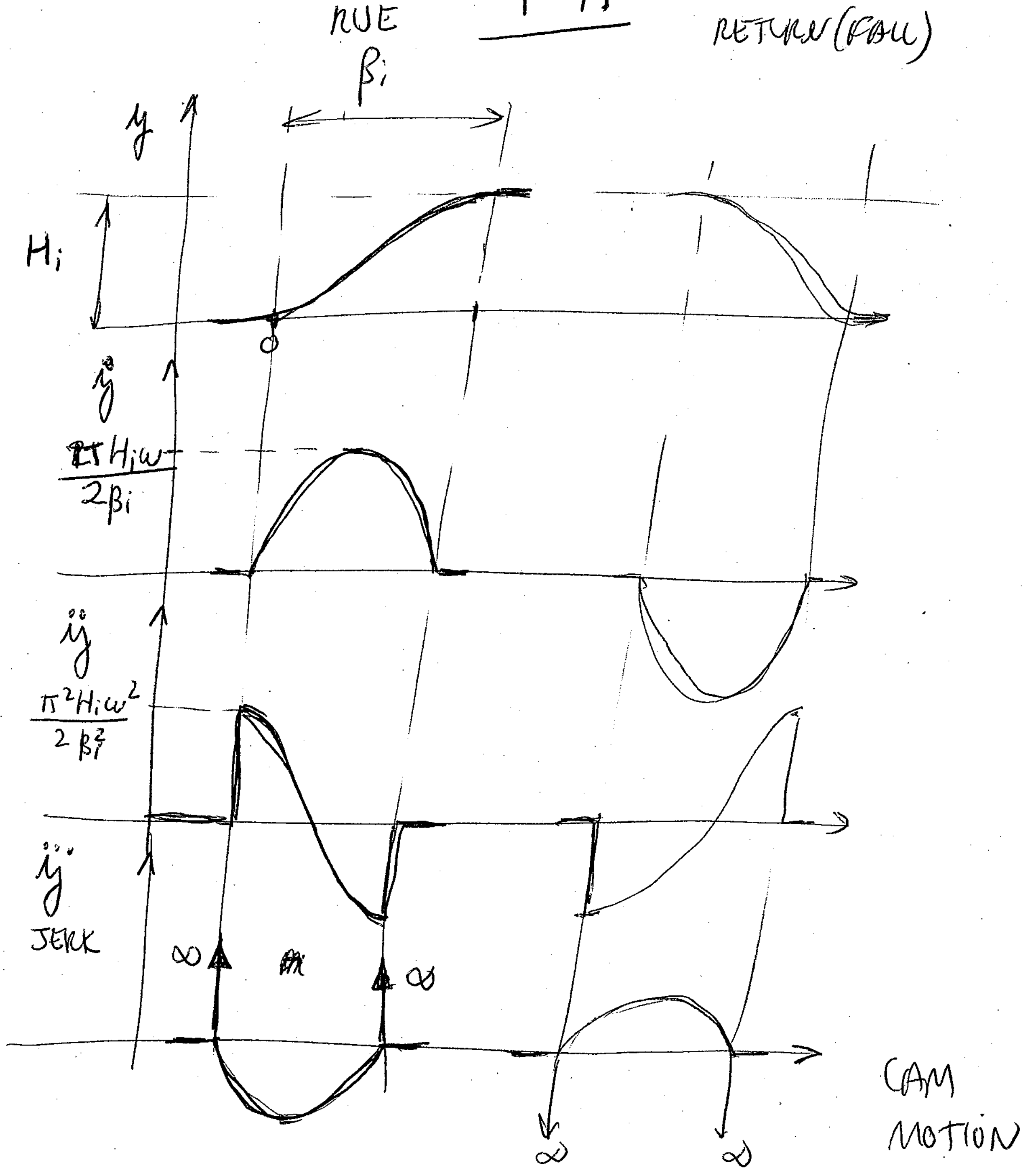
RISE
β_i
RETURN (FALL)
y
H_i
0
$\dot{y}$
$\frac{\cancel{\pi} H_i\omega}{2\beta_i}$
$\ddot{y}$
$\frac{\pi^2 H_i\omega^2}{2\beta_i^2}$
$\dddot{y}$
JERK
∞
∞
∞
∞
CAM MOTION

9-12

Cycloidal Motion

Sinusoidal motion, having zero acceleration at the limits, so it is used for high speed applications:

	Rise	Return
Displacement	$y = H_i\left(\frac{\phi}{\beta_i} - \frac{1}{2\pi}\sin\left(\frac{2\pi\phi}{\beta_i}\right)\right)$	$y = H_i\left(1 - \frac{\phi}{\beta_i} + \frac{1}{2\pi}\sin\left(\frac{2\pi\phi}{\beta_i}\right)\right)$
Velocity	$\dot{y} = \frac{H_i\omega}{\beta_i}\left[1 - \cos\left(\frac{2\pi\phi}{\beta_i}\right)\right]$	$= -\dot{y}_{rise}$ $\dot{y} = \frac{-H_i\omega}{\beta_i}\left[1 - \cos\left(\frac{2\pi\phi}{\beta_i}\right)\right]$
acceleration	$\ddot{y} = \frac{2\pi H_i\omega^2}{\beta_i^2}\sin\left(\frac{2\pi\phi}{\beta}\right)$	$-\ddot{y}_{rise}$ $\ddot{y} = -\frac{2\pi H_i\omega^2}{\beta_i^2}\sin\left(\frac{2\pi\phi}{\beta_i}\right)$
Jerk	$\dddot{y} = \frac{4\pi^2 H_i\omega^3}{\beta_i^3}\cos\left(\frac{2\pi\phi}{\beta}\right)$	$= -\dddot{y}_{rise}$ $\dddot{y} = -\frac{4\pi^2 H_i\omega^3}{\beta_i^3}\cos\left(\frac{2\pi\phi}{\beta_i}\right)$

$$\boxed{\begin{aligned}\beta_i &= \omega t_i\\ \phi &= \omega t\end{aligned}}$$

9-13 A

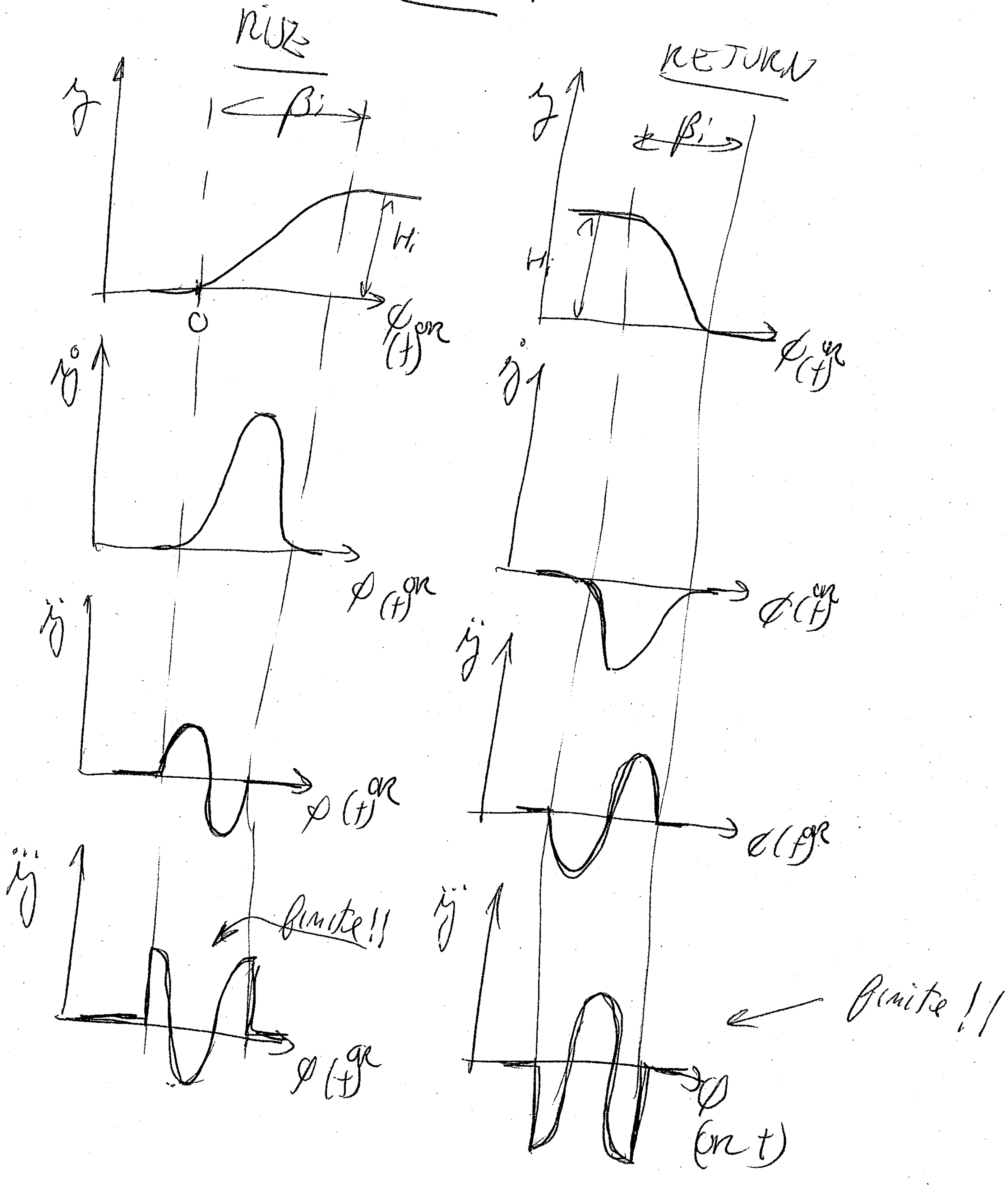

RISE
RETURN
y
β_i
H_i
0
ϕ or (t)
$\dot{y}$
$\ddot{y}$
$\dddot{y}$
finite!!
finite!!
ϕ (or t)

9-13 B

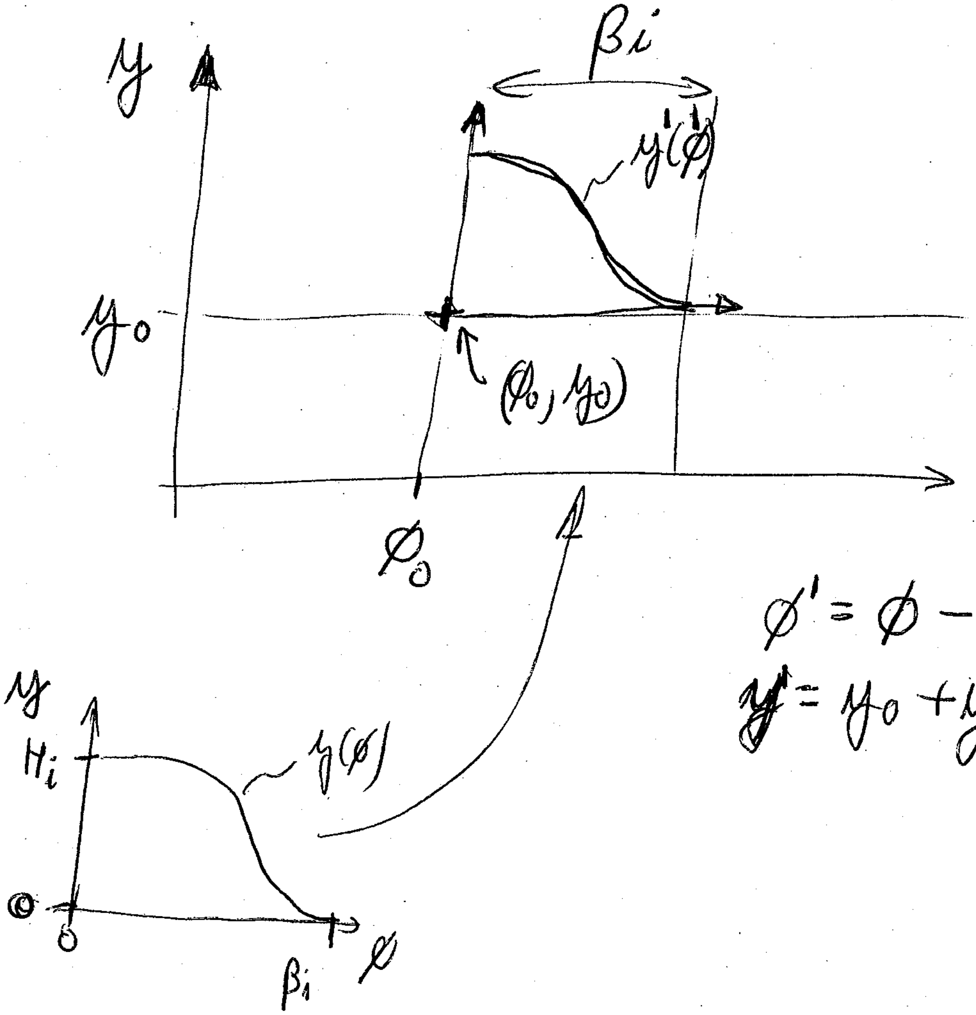

$$\phi' = \phi - \phi_0$$

$$y = y_0 + y'$$

9-14

EXAMPLE (Analitically solutions only)

Profile:

SEQUENCE #	MOVEMENT	H_i [m]	t_i [s] (or β_i)
1	RISE cycloidal motion	0.5	0.7
2	dwell	—	0.2
3	RETURN HARMONIC	0.3	0.5
4	dwell	—	0.2
5	RETURN CONSTANT ACCELERATION	0.2	0.5

REPEAT

Determine the required speed of the cam and ~~graphically~~ plot a follower displacement diagram
WRITE THE EXPRESSION $y(\phi)$

Solution $T = \sum t_i = 0.7 + 0.2 + 0.5 + 0.2 + 0.5 = 2.1\,s$

$$\omega = \frac{2\pi\,rad}{2.1\,s} = 2.992\,\frac{rad}{s} \left(= 171.43\,\frac{°}{s}\right)$$

$$\beta_1 = t_1 \cdot \omega = 120° \left(= 0.7 \cdot 171.43\right)$$

$$\beta_2 = t_2\,\omega = 0.2 \cdot 171.43 = 34.286° = \beta_4$$

$$\beta_3 = t_3\,\omega = \dots = 85.71° = \beta_5$$

check:
$$\left(\sum \beta_i = \dots = 360°\right)$$

9-15

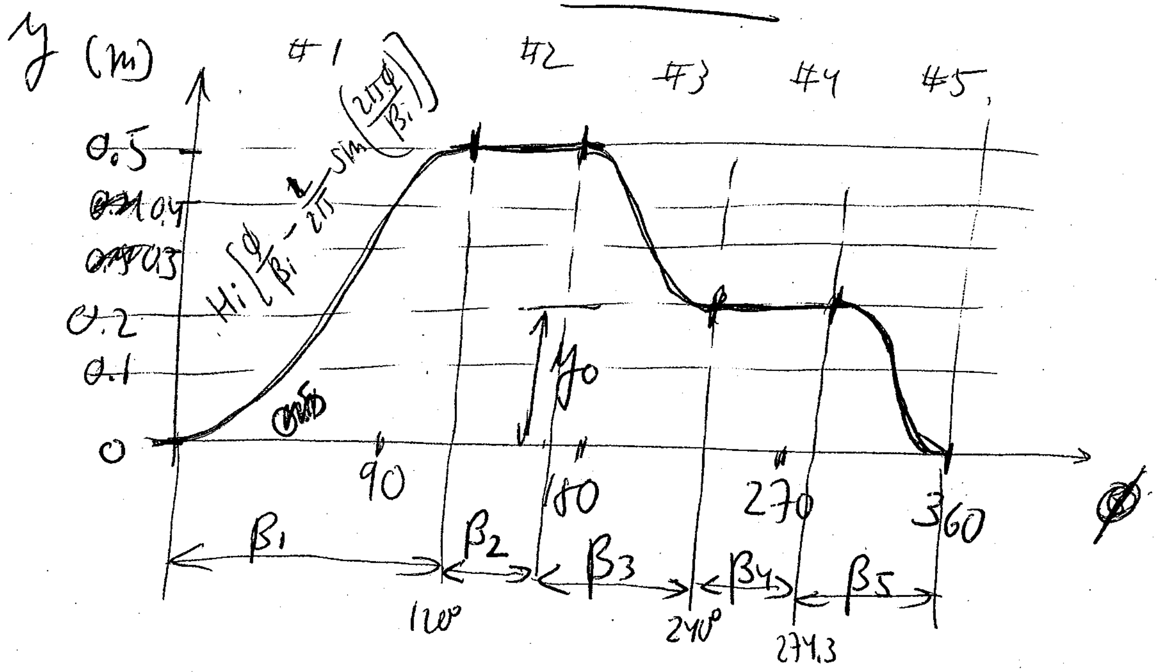

follower function

\#

① $0 < \phi < \overset{120°}{\beta_1}$ $\quad y = H_1\left(\frac{\phi}{\beta_1} - \frac{1}{2\pi}\sin\left(\frac{2\pi\phi}{\beta_1}\right)\right) = 0.5\left[\frac{\phi}{120°} - \frac{1}{2\pi}\sin\left(\frac{2\pi\phi}{120°}\right)\right]$ (m)

② $\beta_1 < \phi < \beta_1 + \beta_2$ $\quad y = H_1 = 0.5$ (m)

$120° < \phi < 154.3°$

$\beta_1 + \beta_2 < \phi < \beta_1 + \beta_2 + \beta_3$ $\quad = H_1 - H_3 + \quad y = \frac{H_3}{2}\left(1 + \cos\frac{\pi\phi'}{\beta_3}\right)$

$154.3° < \phi < 240°$ $\quad \phi' = \phi - (\beta_1 + \beta_2)$ $\quad y = \frac{0.3}{2}\left(1 + \cos\left[\frac{\pi\{\phi - 154.3°\}}{85.71°}\right]\right)$

④ $\beta_1 + \beta_2 + \beta_3 < \phi < \beta_1 + \beta_2 + \beta_3 + \beta_4$ $\quad y = H_1 - H_3$

$240° < \phi < 274.3°$

⑤ $\beta_1 + \beta_2 + \beta_3 + \beta_4 < \phi < 360°$

$274.3° < \phi < 360°$

$274.3° < \phi < 317.15°$ $\quad y = H_2 - 2H_2\left(\frac{\phi'}{\beta_i}\right)^2$ $\quad y = 0.2 - 0.4\left(\frac{\phi - 274.3°}{85.71}\right)^2$

$317.15° < \phi < 360°$ $\quad y = 2H\left[1 - \left(\frac{\phi'}{\beta_i}\right)^2\right]$ $\quad y = 0.4\left(1 - \left(\frac{\phi - 274.3°}{85.71°}\right)^2\right)$

9-16

INTERVAL #	ϕ RANGE [deg]	y_0, ϕ_0	GENERAL $y(\phi)$	$y(\phi)$ (m)
1	$0 < \phi < \beta_1$ $0 < \phi < 120°$	$\phi_0 = 0$ $y_0 = 0$	$H_1\left(\frac{\phi}{\beta_1} - \frac{1}{2\pi}\sin\left(\frac{2\pi\phi}{\beta_1}\right)\right)$	$0.5\left(\frac{\phi}{120°} - \frac{1}{2\pi}\sin\left(\frac{2\pi\phi}{120°}\right.\right.$
2	$\beta_1 < \phi < \beta_1 + \beta_2$ $120° < \phi < 154.3°$	$\phi_0 = 120°$ $y_0 = 0.5$	H_1	0.5
3	$\beta_1 + \beta_2 < \phi < \beta_1 + \beta_2 + \beta_3$ $154.3° < \phi < 240°$	$\phi_0 = 154.3°$ $y_0 = H_1 - H_3 = H_2 = 0.2$	$H_2 + \frac{H_3}{2}\left(1 + \cos\frac{\pi(\phi - \phi_0)}{\beta_3}\right)$	$0.2 + \frac{0.3}{2}\left[1 + \cos\left(\frac{\pi\{\phi - 154.3°\}}{85.71°}\right)\right]$
4	$\beta_1 + \beta_2 + \beta_3 < \phi < \beta_1 + \beta_2 + \beta_3 + \beta_4$ $240° < \phi < 274.3°$	$\phi_0 = 240°$ $y_0 = H_2$	H_2	0.2
5	$\sum_1^4 \beta_i < \phi < \sum_1^4 \beta_i + \frac{\beta_5}{2}$ $274.3° < \phi < 317.15°$	$\phi_0 = 274.3°$ $y_0 = 0$	$H_2 - 2H_2\left(\frac{\phi - \phi_0}{\beta_5}\right)^2$	$0.2 - 0.4 \cdot \left(\frac{\phi - 274.3°}{85.71°}\right)^2$
	$\sum_1^4 \beta_i + \frac{\beta_5}{2} < \phi < 360°$ $317.15° < \phi < 360°$	$\phi_0 = 274.3°$ $y_0 = 0$	$2H_2\left[1 - \frac{(\phi - \phi_0)}{\beta_5}\right]^2$	$0.4 \cdot \left(1 - \frac{(\phi - 274.3°)}{85.71°}\right)^2$

9-17

DISK CAM PROFILE DESIGN

Realize the displacement Diagram of the follower motion as a function of the cam position

In a general case

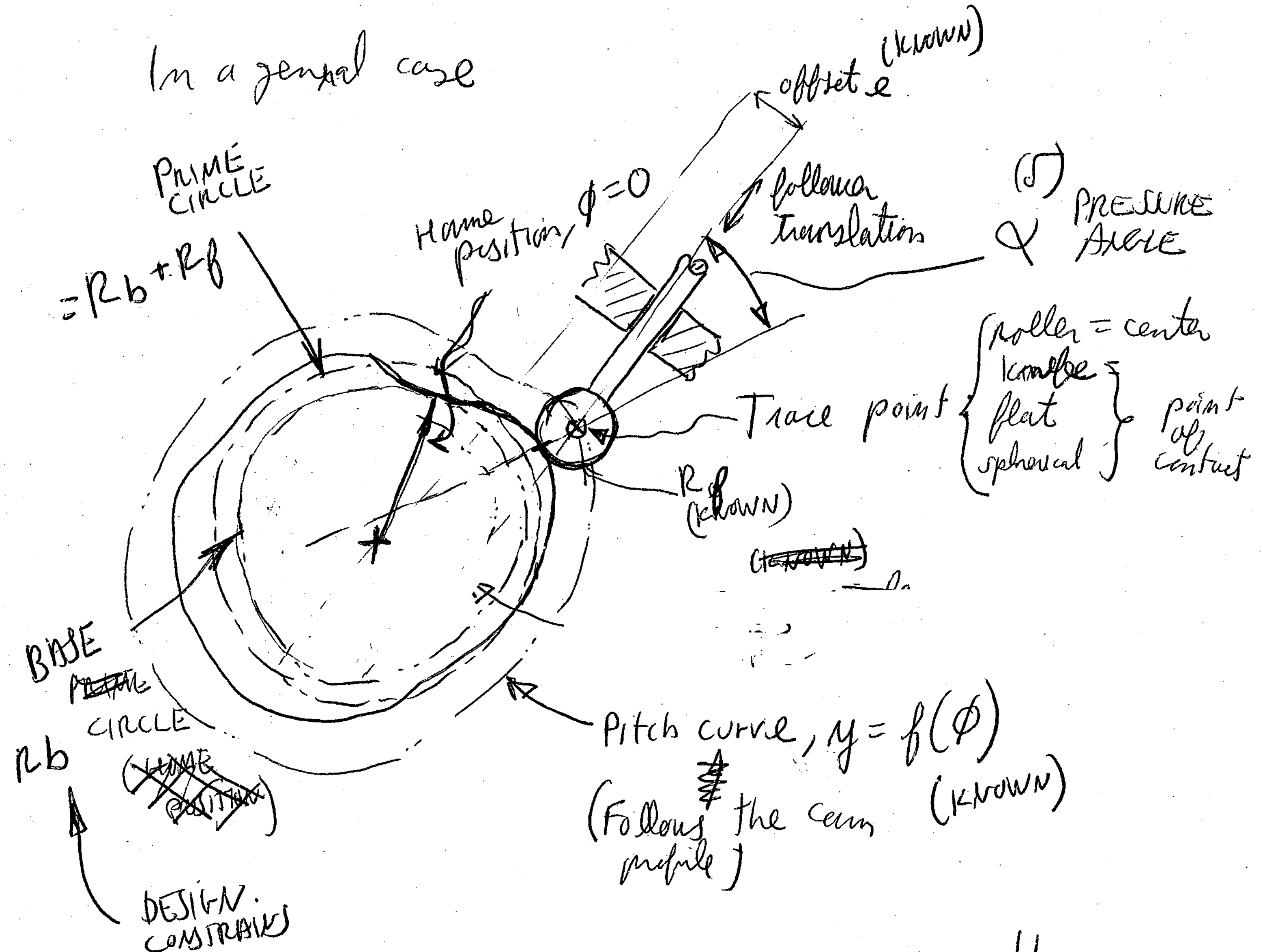

DESIGN LIMITATIONS

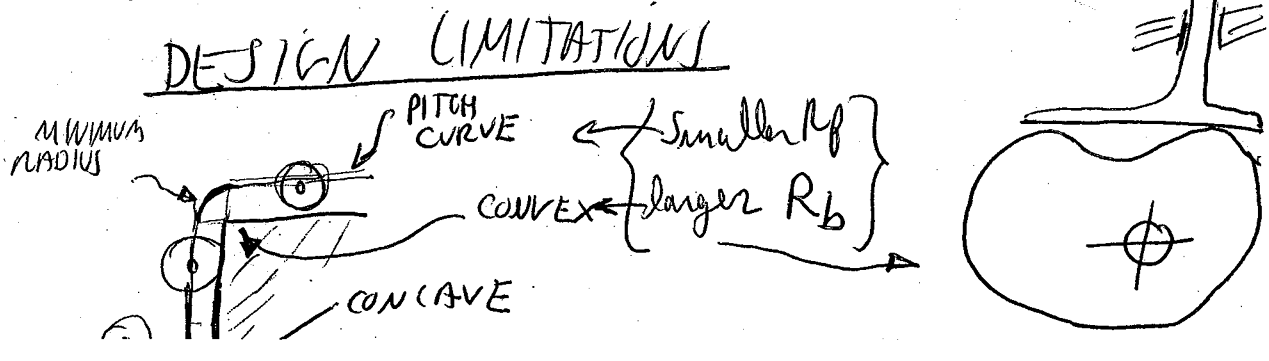

9-18

IN LINE KNIFE EDGE FOLLOWER DESIGN

LET ASSUME

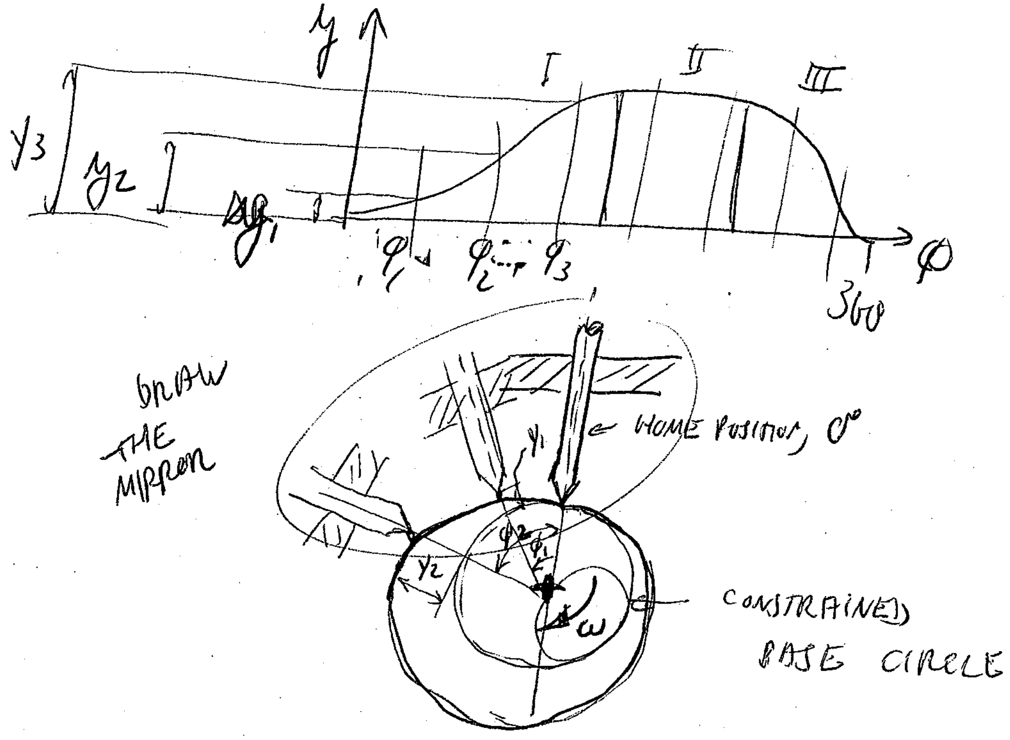

DESIGN OF THE CAM BY INVERSE KINEMATICS –
THE CAM IS THE FRAME

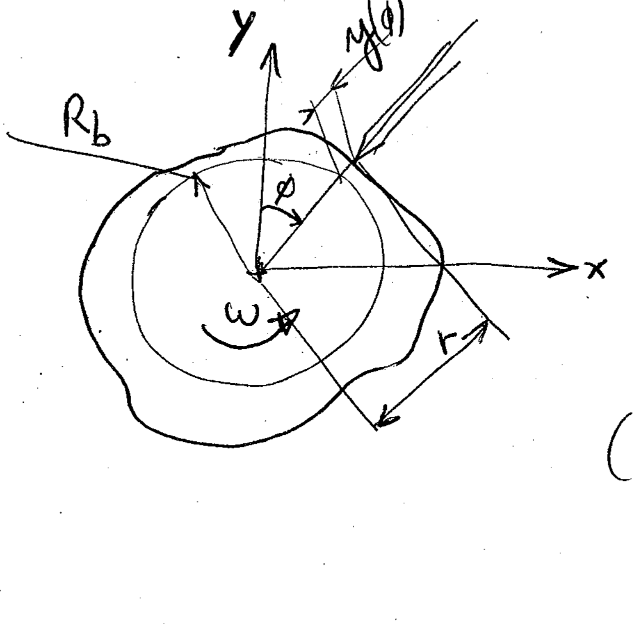

$$r = R_b + y(\phi)$$

$$r_x = r\sin\phi = (R_b + y)\sin\phi$$

$$r_y = r\cos\phi = (R_b + y)\cos\phi$$

(adding miller cutter radius)

9-18

In-Line Roller Follower

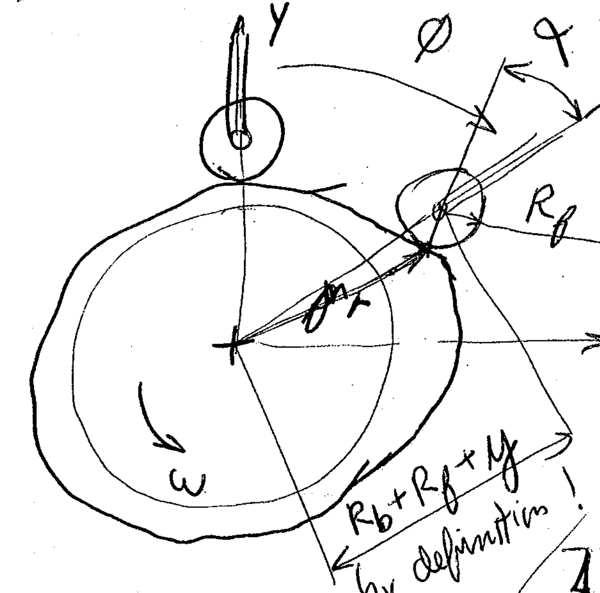

$$(1)\quad r\cos\beta + R_f\cos\alpha = R_b+R_f+y$$

$$(2)\quad r\sin\beta = R_f\sin\alpha$$

PRESSURE ANGLE:

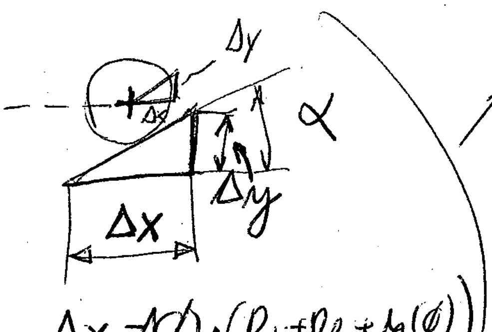

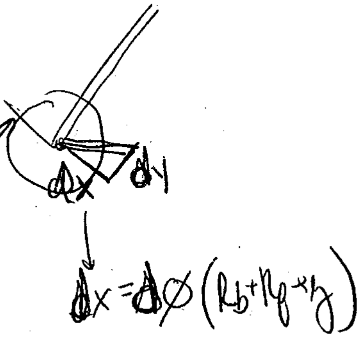

$$\Delta x = \Delta\phi\cdot(R_b+R_f+y(\phi))$$

$$dx = d\phi\,(R_b+R_f+y)$$

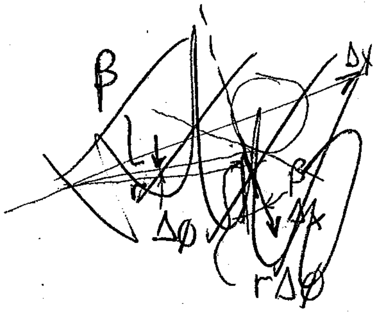

$$tg\,\alpha = \frac{dy}{dx} = \frac{dy}{d\phi\,(R_b+R_f+y(\phi))}$$

$$(3)\quad \alpha = \tan^{-1}\left(\frac{y'}{R_b+R_f+y(\phi)}\right)$$

$$\boxed{\text{UNKNOWNS: } r, \beta, \alpha}$$

$$y' = \frac{\dot{y}}{\omega} = \frac{v}{\omega} \leftarrow$$ IF YOU ARE NOT SHURE, USE RADIANS FOR ϕ & β

$$\beta \simeq 0 \quad \rightsquigarrow \quad (1)'\quad r + R_f\cos\alpha = R_b+R_f+y(\phi)$$

$$(2)'\quad r\cdot\beta = R_f\sin\alpha \quad \text{(USELESS)}$$

$$(3)' = (3)$$

$$\boxed{r \simeq R_b + R_f(1-\cos\alpha) + y(\phi)}$$

9-20

In order to draw it in excel:

$$\boxed{\begin{aligned} r_x &= r\sin\phi \\ r_y &= r\cos\phi \end{aligned}}$$

	ϕ (rad)	y	y' $\left(\frac{\dot y}{\omega}\right)$	α (rad)	r	r_x	r_y
β_1 (rad), interval #1	0°						
β_2 (rad) #2							
β_3 (rad) #3							
⋮	360°(2π)						

Offset roller follower

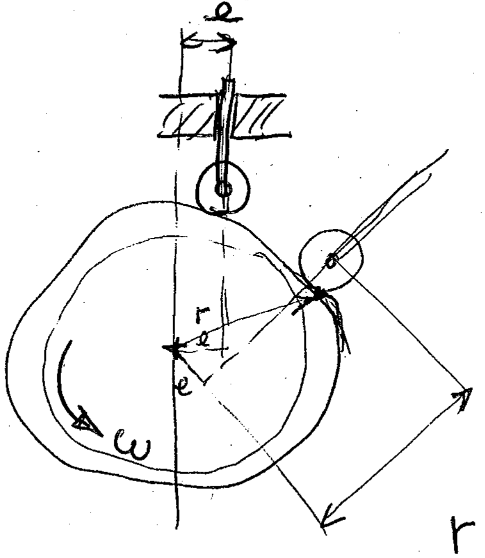

~~$\alpha = \tan^{-1}\left[\frac{y'(R_f+R_b+y)}{e^2+(R_f+R_b+y)^2-y'e}\right]$~~

~~$\tan^{-1}\left(\frac{e}{R_f+R_b+y}\right)$~~

r = Equations in the Textbook

Translating Flat-Faced Follower

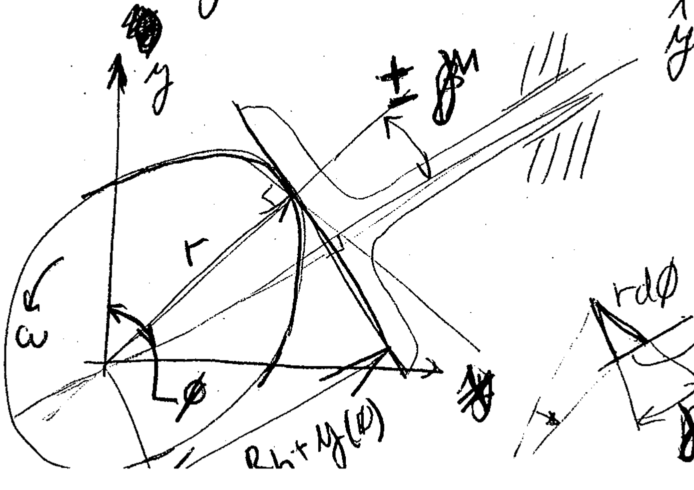

$r\cos\beta^M = R_b + y(\phi)$

$r\,d\phi\sin\beta^M = dy$

$r\sin\beta^M = \frac{dy}{d\phi} = y'$

9-21

$$\frac{r \cdot \sin \beta^{M}}{r \cos \beta^{M}} = \frac{y'}{R_b + y(\phi)}$$

$$\boxed{\beta^{M} = \tan^{-1}\left(\frac{y'}{R_b + y(\phi)}\right)}$$

$$r_{(\phi-\beta^{M})} = \frac{R_b + y}{\cos \beta^{M}}$$

$$r_{x\,(\phi-\beta^{M})} = \frac{R_b + y}{\cos \beta^{M}} \sin(\phi - \beta^{M})$$

$$r_{y\,(\phi-\beta^{M})} = \frac{R_b + y}{\cos \beta^{M}} \cos(\phi - \beta^{M})$$

Pivoted Roller Follower

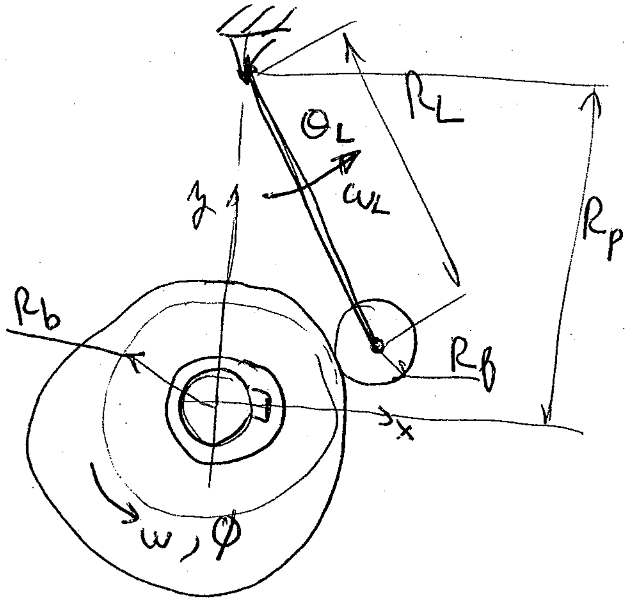

TEXTBOOK

$R_x =$

$R_y =$

Cylindrical cams → same principle, –

9-22

THE GENEVA MECHANISM

$n = \frac{360^\circ}{\beta_0}$

$\gamma_0 = 90^\circ - \frac{\beta_0}{2}$

$a = d \sin\left(\frac{\beta_0}{2}\right)$

$R = d \cos\left(\frac{\beta_0}{2}\right)$

$S < d - a$

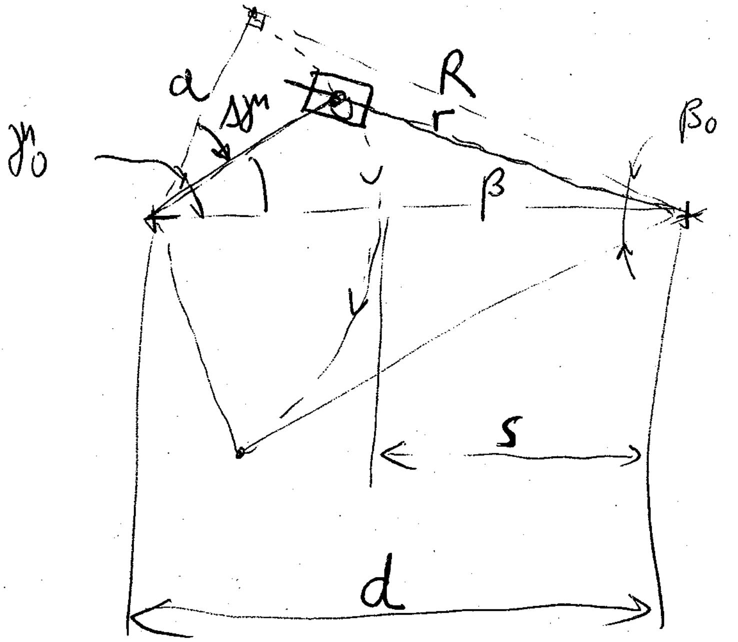

$$\beta = \sin^{-1}\left[\left(\frac{a}{r}\right)\sin(180^\circ - \psi)\right]$$

$$r = \sqrt{a^2 + d^2 - 2ad\cos(180 - \psi)}$$

$$\psi = 180^\circ - \gamma_0 + \Delta\gamma$$

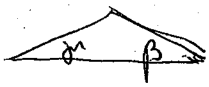

$\beta - \psi =$

$= \beta - \pi + \gamma_0 + \Delta\gamma$

$\gamma = \gamma_0 - \Delta\gamma$

$= \beta + \gamma - \pi$

$\beta - \psi) = 1$

$\psi = m\pi$

$-\pi = m\pi$

$\gamma = m\pi$

$0 \overset{\pi}{\underset{2}{\geq}} \gamma > 0$

≥ 0

$\beta + \gamma \geq 0$

$= \gamma = 0$

ψ π

$\cancel{\beta - 180 + \gamma_0 - \Delta\gamma = m\pi}$

$= 0 \rightsquigarrow \cancel{\Delta\gamma = \gamma_0}$

Instantaneous velocity

$$\omega_{wheel} = \left(\frac{a}{r}\right)\omega_{input\,shaft}\cos(\beta - \psi)$$

$\alpha_{wheel} = \ldots\ldots$

EXAMPLE

$d = 80\text{mm}$

$\omega_{input\,shaft} = 80\text{ RPM}$

SIX stations

$\omega_{wheel}\Big|_{max} - ?$

$\beta_0 = 360/6 = 60^\circ$

$\beta_0 = 60$

$$\omega_{wheel}\Big|_{max} = \left(\frac{a}{r}\right)\omega_{input\,shaft} = \frac{d\sin\left(\frac{\beta_0}{2}\right)}{-a+d}\omega_{input\,shaft} = \frac{\cancel{\sin\left(\frac{\beta_0}{2}\right)}}{-\cancel{\sin\left(\frac{\beta_0}{2}\right)}+1}\omega_{input\,shaft}$$

$\rightarrow 1$

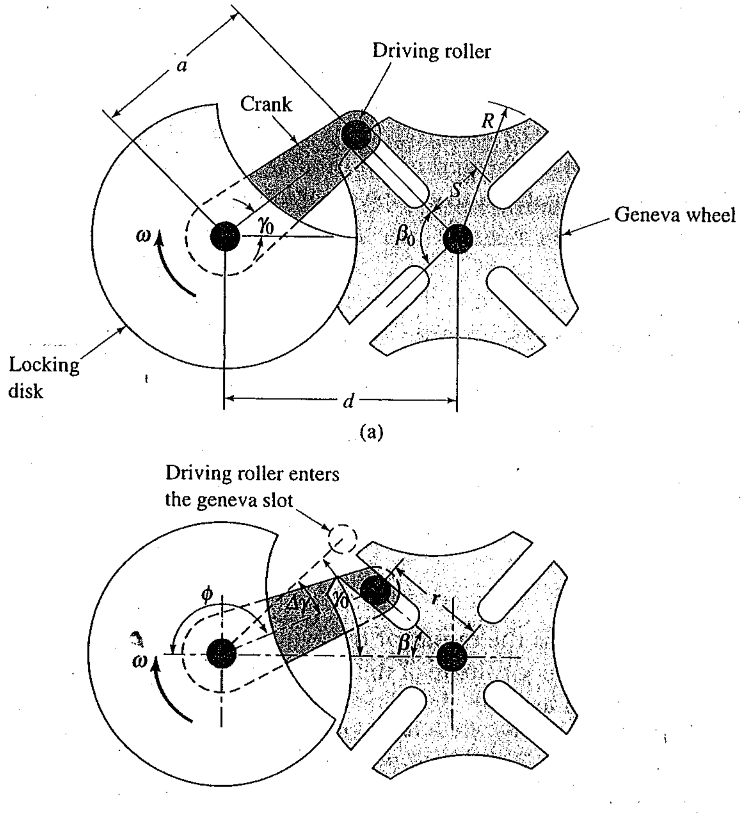

(a)

(b)

Figure 9.35 Four-station geneva mechanism.

position until the roller enters the next slot. In Fig. 9.35a, the roller rotates clockwise and is just about to enter the geneva wheel. In Fig. 9.35b, the roller has entered the slot and has turned the wheel counterclockwise. Notice that the locking disk has moved away from the wheel, allowing it to rotate.

When designing a wheel, it is important that the roller enters the slot tangentially. Otherwise, impact loads are created and the mechanism will perform poorly at high speeds or loads. Because of this constraint, the following geometric relationships are derived [Ref. 7]. Refer to Fig. 9.35 for definitions of the geometric properties.

$$\beta_o = \frac{360^\circ}{n} \tag{9.43}$$

where

n = Number of stations in the geneva wheel

$$\gamma_o = 90^\circ - \frac{\beta_o}{2} \tag{9.44}$$

9-23

EXAMPLE

$d = 80\,\text{mm}$

$\omega_{\text{input shaft}} = 80\ \text{RPM}$

Six stations

$\omega_{\text{wheel}}\big|_{\max} - ?$

SOLUTION

$$\omega_{\text{wheel}}\ ~~\max~~ = \left(\frac{a}{r}\right)\omega_{\text{input shaft}}\cos(\beta - \psi)$$

max when $\cos(\beta - \psi) = 1$

$$\left.\begin{aligned} \beta - \psi &= \pi \cdot m \\ \psi &= \pi - \mu \end{aligned}\right\} \begin{aligned} \beta - \pi + \mu &= \pi m \\ \beta + \mu &= \pi m^{*} \end{aligned}$$

$$\left.\begin{aligned} 0 \le \beta &< \frac{\pi}{2} \\ 0 \le \mu &< \frac{\pi}{2} \end{aligned}\right\} \rightarrow 0 \le \beta + \mu < \pi$$

POSITIVE

~~$\beta \neq \mu$~~

$m^{*} = 0$

μ, β THE SAME SIGN

$$\underline{\mu = \beta = 0}$$

$$\left.\begin{aligned} -\frac{\pi}{2} &< \beta \le 0 \\ -\frac{\pi}{2} &< \mu \le 0 \end{aligned}\right\} -\pi \le \beta + \mu \le 0$$

NEGATIVE

$$\underline{\underline{\omega_{\text{wheel}}\big|_{\max}}} = \left.\begin{aligned} r\big|_{\beta=0} &= d - a \\ \frac{a}{r}\Big|_{\beta=0} &\omega_{\text{input shaft}} \end{aligned}\right\} = \left.\begin{aligned} a &= d\sin\left(\frac{\beta_0}{2}\right) \\ &\frac{d\ ~~\sin\frac{\beta_0}{2}~~}{d - a}\,\omega_{1,S_0} \end{aligned}\right\} = \left.\begin{aligned} \beta_0 &= \frac{360}{6} = 60° \\ &\frac{\sin\frac{\beta_0}{2}}{1 - \sin\left(\frac{\beta_0}{2}\right)}\,\omega_{1,S} \end{aligned}\right\} = \underline{\underline{\omega_{1,S}}}$$

Design Considerations 9-24

Slider lock due to friction

CASE 1

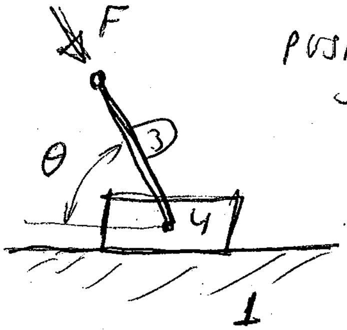

PUSHING THE SLIDER

(ASSUMING $W_4, W_3 << F$)

FREE BODY DIAGRAM

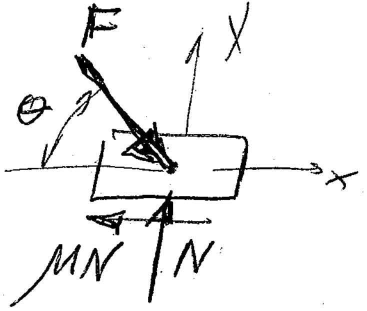

ASSUME:
LINK 3 TRANSMIT THE FORCE BETWEEN TWO PIN JOINTS, SO IT IS A BAR AND THE FORCE IS Transmitted in the direction between the two pin Joins

$$\Sigma F_y = -F\sin\theta + N = 0 \rightarrow N = F\sin\theta$$

$$\Sigma F_x = m_4\ddot{x} = F\cos\theta - \mu N$$
$$= F(\cos\theta - \mu\sin\theta)$$

In order to allow motion:

$$\cos\theta - \mu\sin\theta > 0$$

$$\mu < \frac{1}{tg\theta}$$

$$tg\,\theta < \frac{1}{\mu}$$

μ	θ
0.2	78.7°

9-25

CASE 2

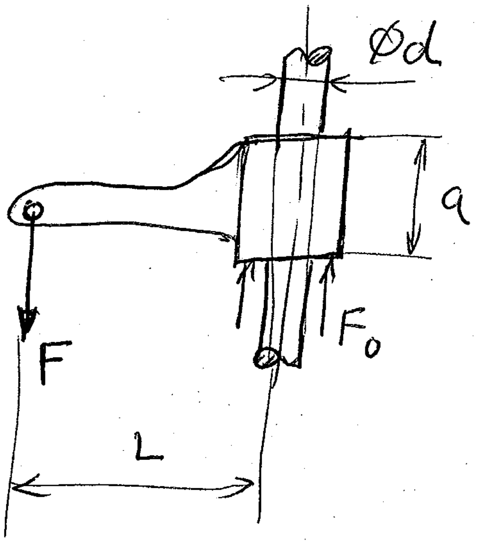

NEGLECT THE WEIGHT
OF THE SLIDER, $W \ll F$

FREE BODY DIAGRAM

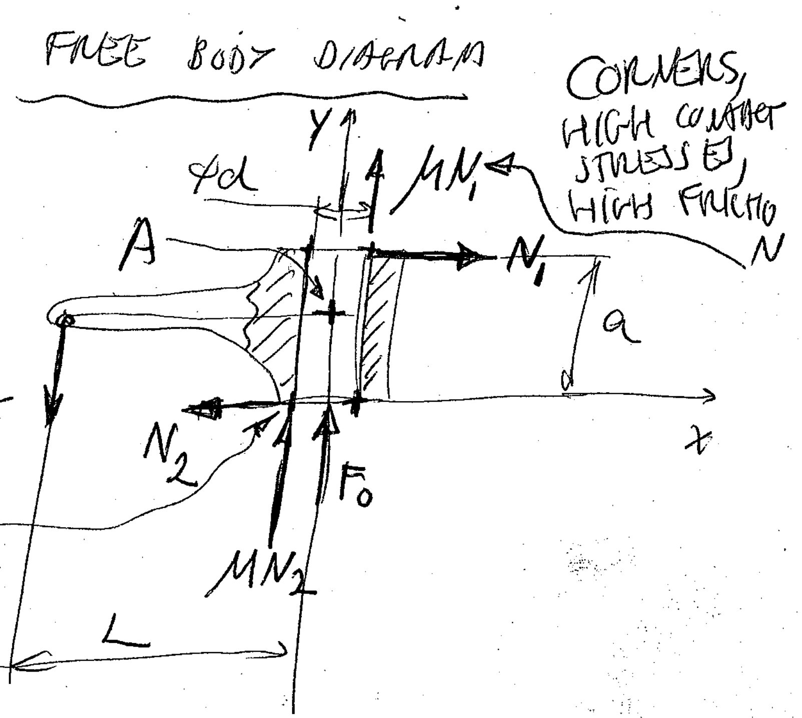

$$\sum F_x = N_1 - N_2 = 0$$

$$N_1 = N_2 = N$$

$$\circlearrowright \sum M_A = +F\cdot L - N\cdot a = 0$$

$$N = \frac{FL}{a}$$

$$\sum F_y = 0 = -F + F_0 + 2\mu N = -F + F_0 + \frac{2\mu F L}{a}$$

$$F_0 = F\left\{1 - \frac{2L\mu}{a}\right\} = p\%\cdot F$$

$$p\% \leq \left\{1 - \frac{2L\mu}{a}\right\}100$$

$$\text{Lock} \rightsquigarrow p\% = 0 \rightsquigarrow a > 2L\mu \; ; \; \boxed{\mu < \frac{a}{2L}}$$

$$L = 0 \rightsquigarrow p\% = 100\%$$

9-26

EXAMPLE:

Let assume $\mu = 0.2$, $L = 5''$, ~~$d = 3/4''$~~ $a - 2$

a. In order not to lock the mechanism:

$$a > \mu(2L) = 0.2(2 \cdot 5) = 2.0''$$

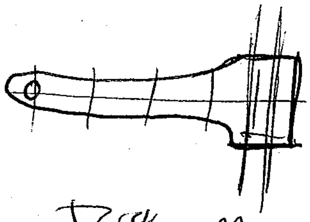

b. For 50% efficiency:

$$0.5 < 1 - \frac{2L\mu}{a}$$

$$\frac{2L\mu}{a} < 0.5$$

$$2L\mu < 0.5a$$

$$a > 2\mu(2\cancel{\mu}L) = 2 \cdot 0.2(2 \cdot 5)$$

$$a > 4.0''$$

c. For 100% efficiency

$$\frac{2L\mu}{a} < 0 \rightarrow a \rightarrow \infty$$

9-27

SPECIAL PLANAR MECHANISMS

Approximate Straight-Line Mechanism

USE of pin joints ~~to~~ → LOW FRICTION LINEAR MOTION
SMOTH ~~FOLLOW~~ MOTION

Watt's Straight-Line Mechanism

(End of 17th century)

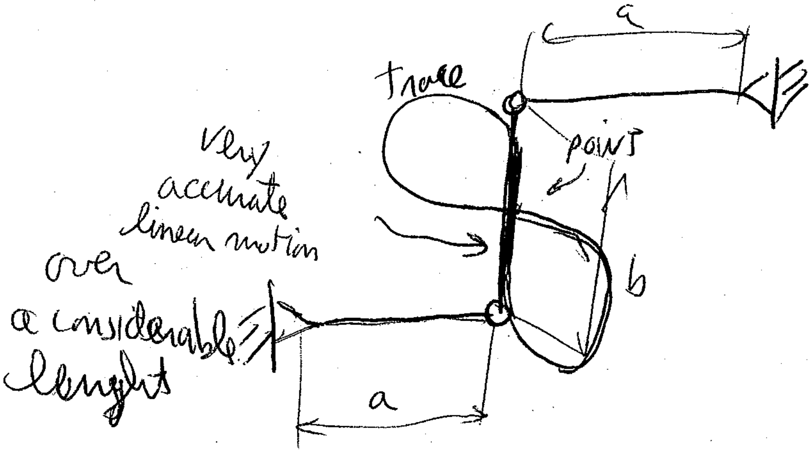

used in rear automotive suspension
a, b - variable

Chebyshev's Straight-Line Mechanism (19th century)

Provide a very long segment of ~~linear~~ linear path
THE points at the same side of the linear path

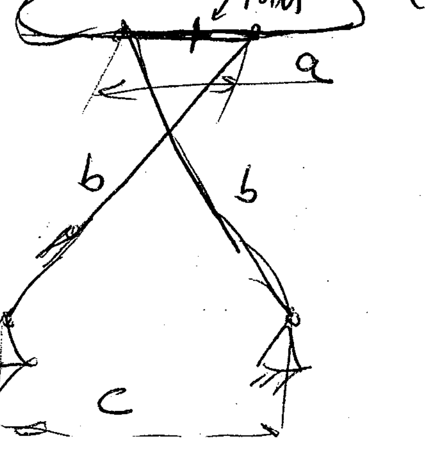

dimensions more critical:
$a = 1,\ b = 2.5,\ c = 2$

type 1 double-rocker

9-28

Roberts's Straight-Line Mechanism

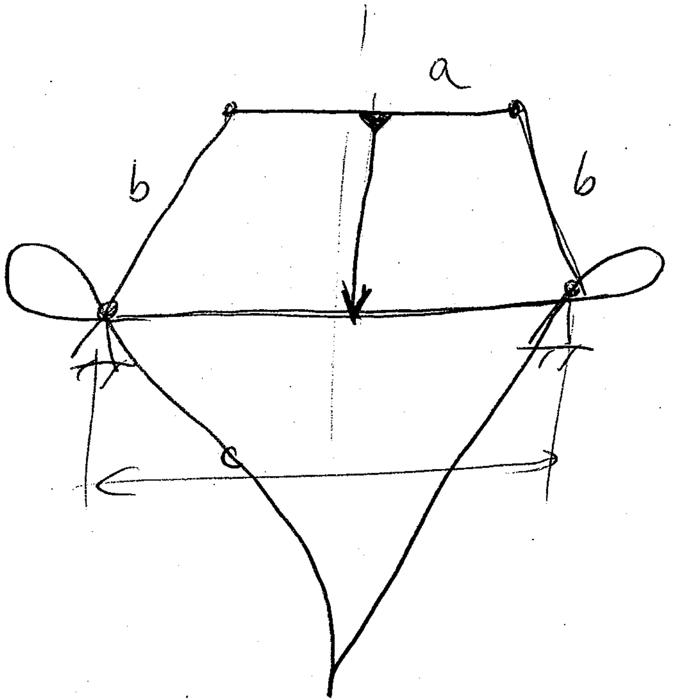

symmetrical four bar linkage
a=1
b=1.2
c=2
d=1.09

AND MORE !!

Exact Straight-Line Mechanism

a need for a relatively complex mechanism.

One of them: Peaucellier linkage

9-29

Peaucellier's exact straight line mechanism

FIRST AND FAMOUS
EXACT STRAIGHTLINE
MECHANISM

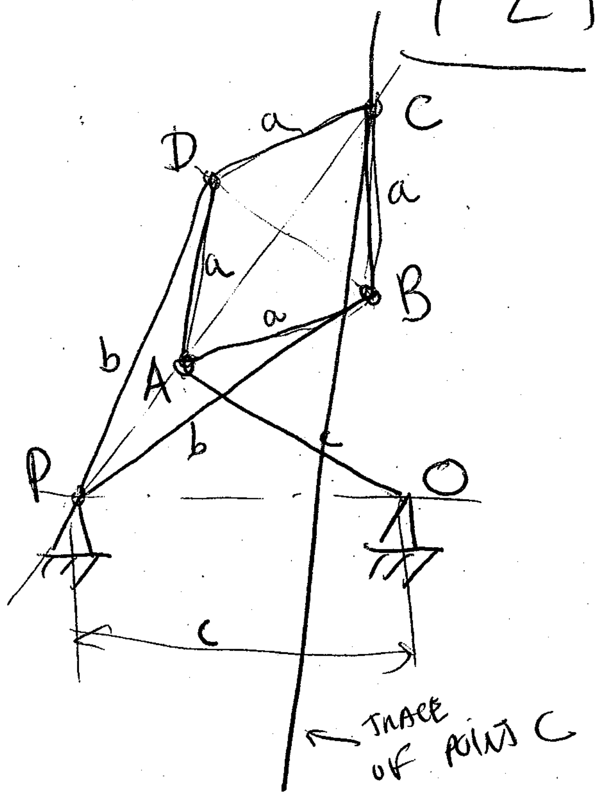

French engineer
1873

ABCD - rhombic loop

b > a

$\overline{PA} \cdot \overline{PC} = \text{const.}$

A - draws a circle

C - draws the inverse circle

a different topology:

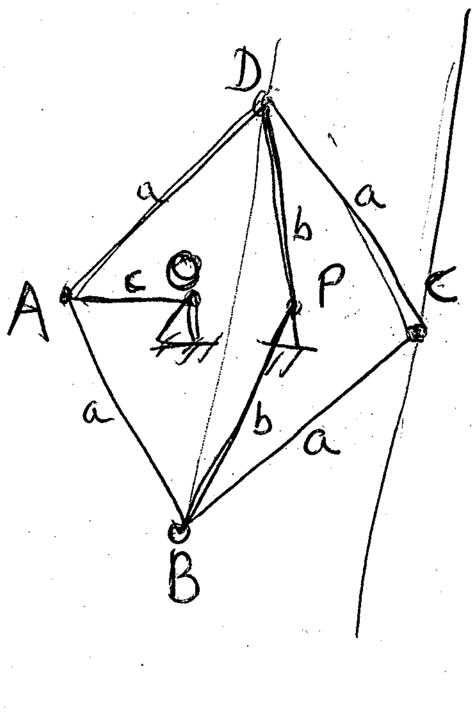

$$b^2 - \left(\frac{\overline{PA}+\overline{PC}}{2}\right)^2 = a^2 - \left(\frac{\overline{PC}-\overline{PA}}{2}\right)^2$$

$$\overline{PA} \cdot \overline{PC} = b^2 - a^2$$

9-30

CENTRODES

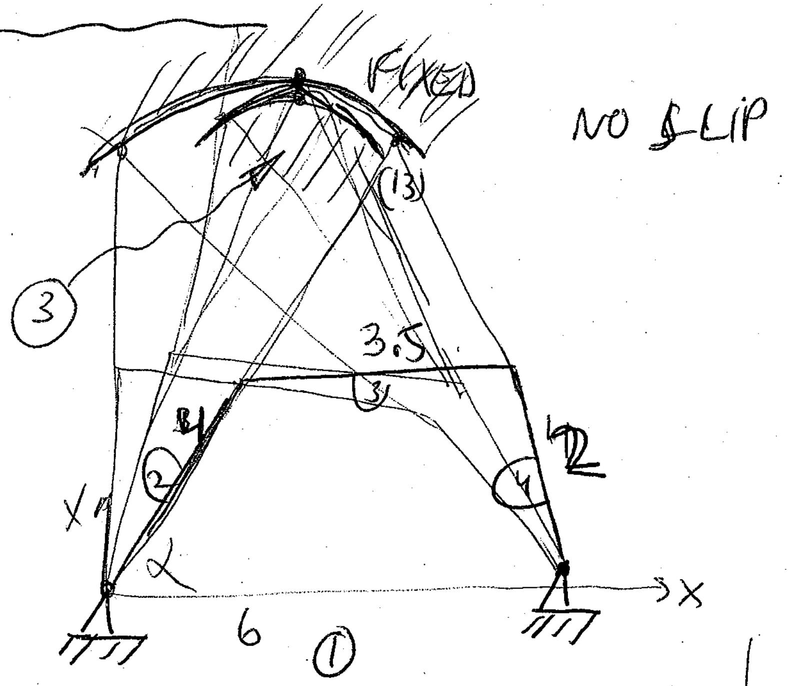

α			x	y
45°	5.57	4.78	6.77	6.77
50°	4.83	4.77	5.67	6.77
55°	3.78	4.56	4.46	6.36
60°	2.24	4.12	3.12	5.4
63°	0 (23)	0	4cosα	4sinα

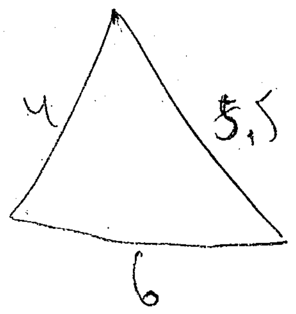

$$\cos\alpha = \frac{4^2+6^2-5.5^2}{2\cdot4\cdot6} =$$

x	y
1.82	3.56

CENTRODES

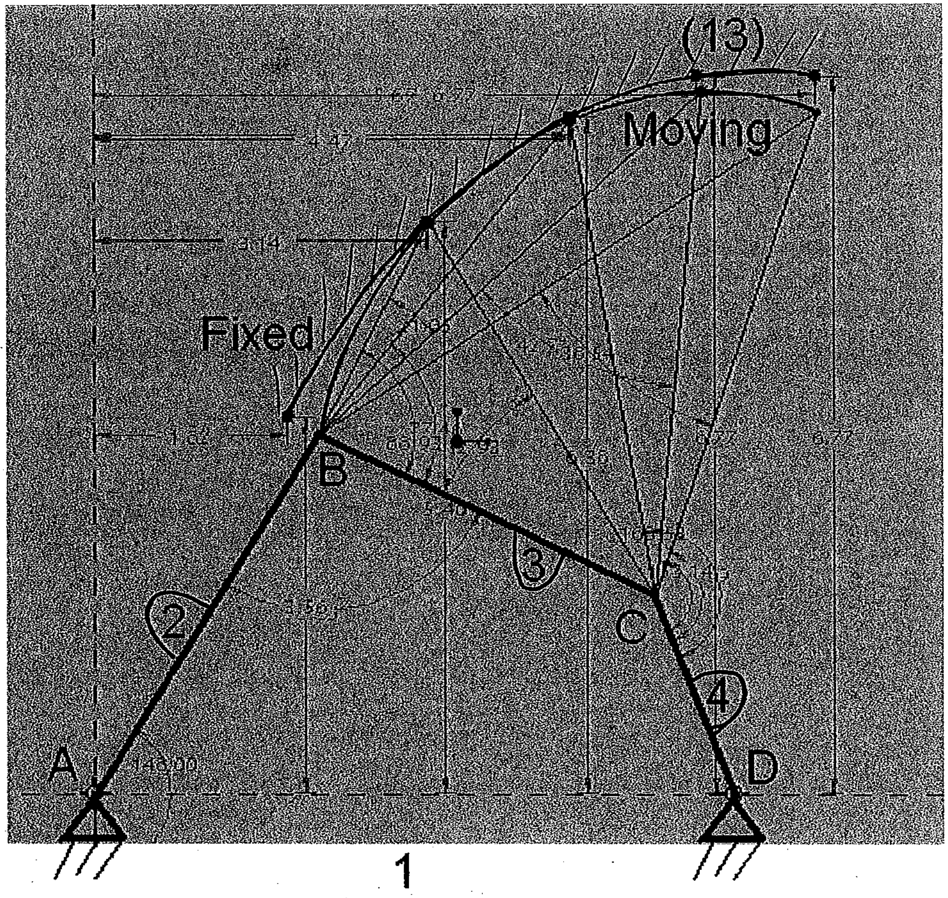

Link 3 rolling on Link 1

SUMMARY

CHAPTER 1 INTRODUCTION *

~~Terminology~~

Kinematic Diagrams

Grueber's Equation

4 bar mechanisms (grashof's criterion)

CRANK SLIDER

1 DOF mechanism

CHAPTER 3 VECTORS

CHAPTER 4 POSITION AND DISPLACEMENT ANALYSIS *

GRAPHICAL SOLUTION

ANALYTICAL SOLUTION → SOLVING TRIANGLES
→ VECTOR EQUATIONS

LIMITING POSITIONS

DISPLACEMENT DIAGRAM

CHAPTER 5 MECHANISM DESIGN *

QUICK RETURN MECHANISMS

GEOMETRIC DESIGN FOR

DIFFERENT POINT SYNTHESIS SITUATIONS

(ADDED CASES)

CAPTER 6 VELOCITY ANALYSIS

RELATIVE VELOCITY METHOD < GRAPHICAL
ANALYTICAL (TRIANGLES)

VELOCITY IMAGE

INSTANTANEOUS CENTER OF ROTATION METHOD < GRAPHICAL
ANALYTICAL (TRIANGLES)

CHAPTER 7 Acceleration Analysis +

Normal and Tangential accelerations

Relative acceleration Method < GRAPHICAL / ANALYTICAL

Acceleration image

floating slider - coriolis acceleration

CHAPTER 9 Cams: Design and Kinematic Analysis

Types of Cams/followers

Follower displacement Diagrams

Library of motion ~~sh~~ schemes
- Constant Velocity
- Constant acceleration
- Harmonic Motion
- Cycloidal Motion

Cam profile Design <
- In line Knife-edge-follower
- " " Roller follower
- Translating Flat-Faced Follower

The Geneva Mechanism

GENERAL - Design Limitations - Friction on sliders

approximate and Exact Linear Motion with pin joined Mechanisms

S3

Final project

① 56 Mechanisms, 16 different Mechanisms

PROJECT LIMITATION

② Use of the essential and principal commands in Mechanism application:

Kinematic analysis, based on rotary servo motors

Other options:

Dynamic / Forces

~~Static~~ Repeated assembly

③ The application may be improved,

(USE OF A DAMPER TO CALCULATE VELOCITY)

④ Three times the link lengths: ENGINEERING ENVIRONMENT

	ANALYTICAL/GRAPHICAL	COMPUTER SIMULATION /
ADVANTAGES	- ABLE TO OPTIMIZE - RELATION BETWEEN PARAMETERS TO PERFORMACE - EXACT SOLUTIONS	- CAPABILITY OF FAST RESULTS (DIFFERENT GEOMETRIES, POSITIONS, etc.) - LESS MISTAKES - INTEGRATION
DISADVANAGES	→ MISTAKES TIME FLEXIBILITY	→ WEAK ~~LESS~~ ANALISIS CAPABILITY

Florida International University
Department of Mechanical and Materials Engineering
Kinematics & Mechanism Design

EML 3262 Final Examination – Version A April 28, 2005

Follow the instructions before you begin the exam:
This test is 150 minutes long. It is not permitted to pass or receive any hardware nor software during the exam. Use your own papers, pens, pencils, calculators, etc.
The following items are allowed during the examination: compass, protractor, ruler, 45° triangle, 60° triangle, pencil, eraser, pens, non programmable calculator, one A4 or 8.5"X11" paper with your remarks, formulas, etc., blank papers.
Write your first and last name, your Panther I. D. & the examination version (A)
Explain your steps, use the adequate diagrams.

This examination consists of 2 problems with several parts to each of the problems. You are to answer all the problems.

Good Luck!

Problem #	Breakdown by Problem	Score
1	50%	
2	50%	

A

QUESTION # 1

$\omega_2 = 300\,\text{RPM ccw}$

$\alpha_2 = 0$

Calculate at the specified position (45°):

- **a) The linear acceleration between the slider (link 3) and link 4 ($|\ddot{\underline{r}}_{B_2C}|$-?)**
- **b) The angular acceleration of link 4 (α_4-?)**

Use:

$$\underline{v}_{B_4B_2} = 21.9\frac{\text{in}}{\text{s}}\angle 75^\circ$$

$$\omega_4 = 10\frac{\text{rad}}{\text{s}}\,\text{ccw}$$

$$\underline{a}_{B_2} = 1381.7\frac{\text{in}}{\text{s}^2}\angle 45^\circ$$

(Hint: $\underline{a}_{B_2C} = \underline{a}_{B_2} = \ddot{\underline{r}}_{B_2C} + \overset{T}{\underline{a}}_{B_2C} + \overset{C}{\underline{a}}_{B_2C} + \overset{N}{\underline{a}}_{B_2C}$)

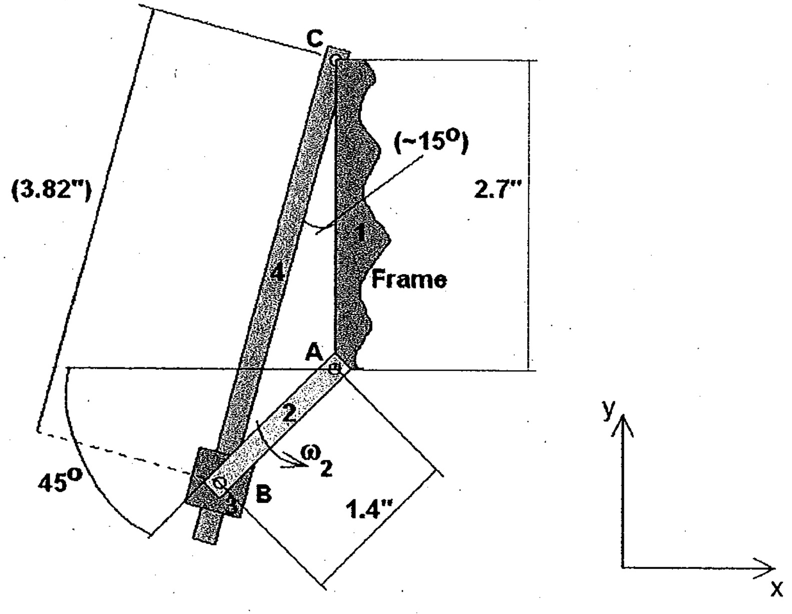

The dimensions in inches

The drawing is not scaled

A

QUESTION # 2

A cam drive is used for a mechanism. The cam follower must rise outward 5mm with harmonic motion in 0.2s, dwell for 0.3s, return 5mm with cycloidal motion in 0.3s, dwell for 0.2s, and then repeat the sequence.

1. Determine the required speed of the cam.

2. The follower displacement diagram:
   a. Determine the functions y_i (interval i) for each interval (specify the interval, $\phi_{i-1} < \phi < \phi_i \rightarrow y_i = ...$).
   b. Calculate the follower displacement, y, at ϕ=30°
   c. Calculate the follower displacement, y, at ϕ=200°

3. The above diagram is realized using a plate cam and an in-line roller follower. The roller radius, Rf=3mm. The radius of the cam's base circle, Rb=18mm
   a. Determine the functions y_i' (interval i) for each interval (specify the interval, $\phi_{i-1} < \phi < \phi_i \rightarrow y_i' = ...$).
   b. Calculate the radius of the cam, r, at ϕ=30°
   c. Calculate the radius of the cam, r, at ϕ=200°

A

Florida International University
Department of Mechanical and Materials Engineering
Kinematics & Mechanism Design

EML 3262 Final Examination – Version B April 28, 2005

Follow the instructions before you begin the exam:

This test is 150 minutes long. It is not permitted to pass or receive any hardware nor software during the exam. Use your own papers, pens, pencils, calculators, etc.

The following items are allowed during the examination: compass, protractor, ruler, 45° triangle, 60° triangle, pencil, eraser, pens, non programmable calculator, one A4 or 8.5"X11" paper with your remarks, formulas, etc., blank papers.

Write your first and last name, your Panther I. D. & the examination version (B)

Explain your steps, use the adequate diagrams.

This examination consists of 2 problems with several parts to each of the problems. You are to answer all the problems.

Good Luck!

Problem #	Breakdown by Problem	Score
1	50%	
2	50%	

B

QUESTION # 1

$\omega_2 = 500\,\text{RPM ccw}$

$\alpha_2 = 0$

Calculate at the specified position (45°):

- **a) The linear acceleration between the slider (link 3) and link 4 ($\left|\ddot{\underline{r}}_{B_2C}\right|$-?)**
- **b) The angular acceleration of link 4 (α_4-?)**

Use:

$$\underline{v}_{B_4B_2} = 36.6\frac{\text{in}}{\text{s}}\angle 75^\circ$$

$$\omega_4 = 16.6\frac{\text{rad}}{\text{s}}\text{ccw}$$

$$\underline{a}_{B_2} = 3838.2\frac{\text{in}}{\text{s}^2}\angle 45^\circ$$

(Hint: $\underline{a}_{B_2C} = \underline{a}_{B_2} = \ddot{\underline{r}}_{B_2C} + \underline{a}^{T}_{B_2C} + \underline{a}^{C}_{B_2C} + \underline{a}^{N}_{B_2C}$)

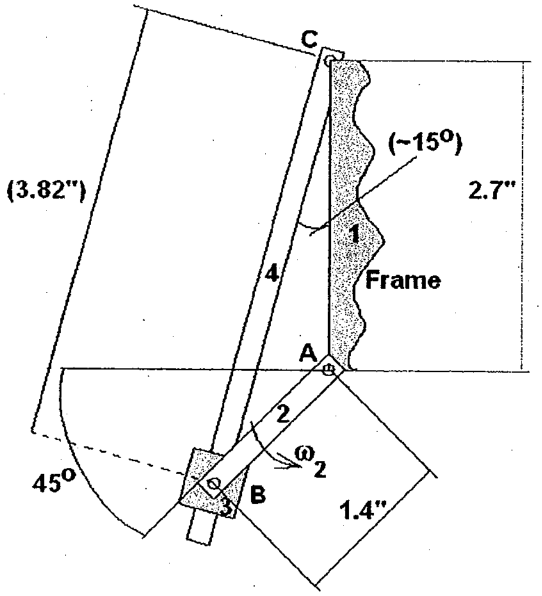

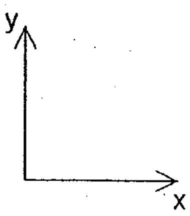

B

The dimensions in inches

<u>The drawing is not scaled</u>

QUESTION # 2

A cam drive is used for a mechanism. The cam follower must rise outward 6mm with harmonic motion in 0.4s, dwell for 0.3s, return 6mm with cycloidal motion in 0.4s, dwell for 0.1s, and then repeat the sequence.

1. Determine the required speed of the cam.

2. The follower displacement diagram:
    a. Determine the functions y_i (interval i) for each interval (specify the interval, $\phi_{i-1} < \phi < \phi_i \rightarrow y_i = ...$).
    b. Calculate the follower displacement, y, at ϕ=30°
    c. Calculate the follower displacement, y, at ϕ=290°

3. The above diagram is realized using a plate cam and an in-line roller follower. The roller radius, Rf=3mm. The radius of the cam's base circle, Rb=18mm
    a. Determine the functions y_i' (interval i) for each interval (specify the interval, $\phi_{i-1} < \phi < \phi_i \rightarrow y_i' = ...$).
    b. Calculate the radius of the cam, r, at ϕ=30°
    c. Calculate the radius of the cam, r, at ϕ=290°

B

Florida International University
Department of Mechanical and Materials Engineering
Kinematics & Mechanism Design

EML 3262 Final Examination – Version C April 28, 2005

Follow the instructions before you begin the exam:
This test is 150 minutes long. It is not permitted to pass or receive any hardware nor software during the exam. Use your own papers, pens, pencils, calculators, etc.
The following items are allowed during the examination: compass, protractor, ruler, 45° triangle, 60° triangle, pencil, eraser, pens, non programmable calculator, one A4 or 8.5"X11" paper with your remarks, formulas, etc., blank papers.

Write your first and last name, your Panther I. D. & the examination version (C)
Explain your steps, use the adequate diagrams.

This examination consists of 2 problems with several parts to each of the problems. You are to answer all the problems.

Good Luck!

Problem #	Breakdown by Problem	Score
1	50%	
2	50%	

C

QUESTION # 1

$\omega_2 = 600\,\text{RPM ccw}$

$\alpha_2 = 0$

Calculate at the specified position (45°):

- **a) The linear acceleration between the slider (link 3) and link 4** $\left(\left|\ddot{\underline{r}}_{B_2C}\right| \text{-?}\right)$
- **b) The angular acceleration of link 4** $(\alpha_4 \text{-?})$

Use:

$$\underline{v}_{B_4B_2} = 43.9\frac{\text{in}}{\text{s}}\angle 75°$$

$$\omega_4 = 20\frac{\text{rad}}{\text{s}}\,\text{ccw}$$

$$\underline{a}_{B_2} = 5527\frac{\text{in}}{\text{s}^2}\angle 45°$$

(Hint: $\underline{a}_{B_2C} = \underline{a}_{B_2} = \ddot{\underline{r}}_{B_2C} + \underline{a}^{T}_{B_2C} + \underline{a}^{C}_{B_2C} + \underline{a}^{N}_{B_2C}$)

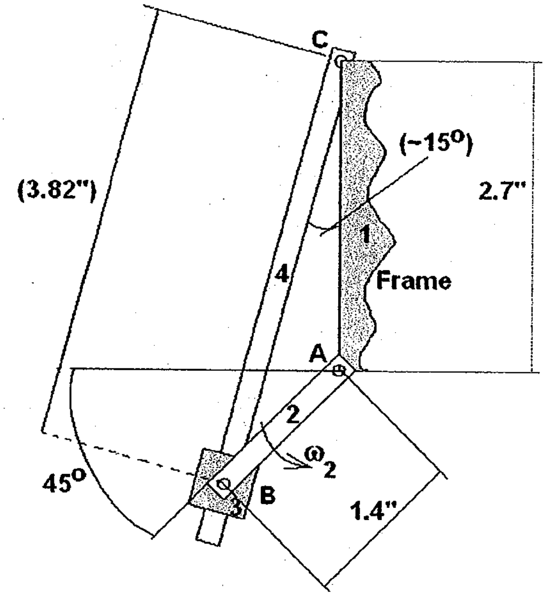

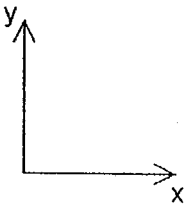

C

The dimensions in inches

The drawing is not scaled

QUESTION # 2

A cam drive is used for a mechanism. The cam follower must rise outward 4mm with harmonic motion in 0.3s, dwell for 0.5s, return 4mm with cycloidal motion in 0.3s, dwell for 0.1s, and then repeat the sequence.

1. Determine the required speed of the cam.

2. The follower displacement diagram:
   a. Determine the functions y_i (interval i) for each interval (specify the interval, $\phi_{i-1} < \phi < \phi_i \;\rightarrow\; y_i = \ldots.$).
   b. Calculate the follower displacement, y, at ϕ=30°
   c. Calculate the follower displacement, y, at ϕ=290°

3. The above diagram is realized using a plate cam and an in-line roller follower. The roller radius, Rf=3mm. The radius of the cam's base circle, Rb=18mm
   a. Determine the functions y_i' (interval i) for each interval (specify the interval, $\phi_{i-1} < \phi < \phi_i \;\rightarrow\; y_i' = \ldots.$).
   b. Calculate the radius of the cam, r, at ϕ=30°
   c. Calculate the radius of the cam, r, at ϕ=290°

C

EML 3262 - Kinematics & Mechanism Design

Final Examination – SOLUTION

QUESTION # 1

Version A	Version B	Version C
$\omega_2 = 300\,\text{RPM ccw}$ $\alpha_2 = 0$ $\underline{v}_{B_4B_2} = 21.9\frac{\text{in}}{\text{s}}\angle 75°$ $\omega_4 = 10\frac{\text{rad}}{\text{s}}\text{ccw}$ $\underline{a}_{B_2} = 1381.7\frac{\text{in}}{\text{s}^2}\angle 45°$	$\omega_2 = 500\,\text{RPM ccw}$ $\alpha_2 = 0$ $\underline{v}_{B_4B_2} = 36.6\frac{\text{in}}{\text{s}}\angle 75°$ $\omega_4 = 16.6\frac{\text{rad}}{\text{s}}\text{ccw}$ $\underline{a}_{B_2} = 3838.2\frac{\text{in}}{\text{s}^2}\angle 45°$	$\omega_2 = 600\,\text{RPM ccw}$ $\alpha_2 = 0$ $\underline{v}_{B_4B_2} = 43.9\frac{\text{in}}{\text{s}}\angle 75°$ $\omega_4 = 20\frac{\text{rad}}{\text{s}}\text{ccw}$ $\underline{a}_{B_2} = 5527\frac{\text{in}}{\text{s}^2}\angle 45°$

ANALITICAL SOLUTION

$$\left.\begin{array}{l} \ddot{\underline{r}}_{B_2C} = \ddot{r}\cdot\left(\cos 75°\cdot\hat{x} + \sin 75°\cdot\hat{y}\right) \\ \underline{a}^{T}_{B_2C} = \left|\underline{a}^{T}_{B_2C}\right|\cdot\left(\cos 345°\cdot\hat{x} + \sin 345°\cdot\hat{y}\right) \end{array}\right\}\begin{array}{l}\text{assu min g the direction. If the result in} \\ 180°\text{ then the solution will be negative}\end{array}$$

Coriolis Acceleration:

$$\underline{a}^{C}_{B_2C} = 2\cdot\omega_4\cdot\dot{r}_{B_2C}\angle\perp\overline{BC}$$

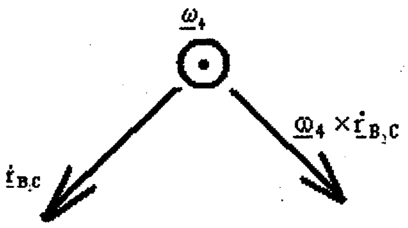

Perpendicular to BC, in $\underline{\omega}_4\times\dot{\underline{r}}_{B_2C}$ direction;

Then:

$$\underline{a}^{C}_{B_2C} = 2\cdot\omega_4\cdot\dot{r}_{B_2C}\angle 345°$$

Version A	$\underline{a}^{C}_{B_2C} = 2\cdot 10.0\cdot 21.9\angle 345° = 438\frac{\text{in}}{\text{s}^2}\cdot\left(\cos 345°\cdot\hat{x} + \sin 345°\cdot\hat{y}\right)$
Version B	$\underline{a}^{C}_{B_2C} = 2\cdot 16.6\cdot 36.6\angle 345° = 1215.12\frac{\text{in}}{\text{s}^2}\cdot\left(\cos 345°\cdot\hat{x} + \sin 345°\cdot\hat{y}\right)$
Version C	$\underline{a}^{C}_{B_2C} = 2\cdot 20.0\cdot 43.9\angle 345° = 1756\frac{\text{in}}{\text{s}^2}\cdot\left(\cos 345°\cdot\hat{x} + \sin 345°\cdot\hat{y}\right)$

Normal acceleration:

$$\underline{a}^{N}_{B_2C} = \omega_4^2 \cdot \overline{BC} \angle // \overline{BC}$$

Version A	$\underline{a}^{N}_{B_2C} = 10.0^2 \cdot 3.82'' \angle 75^\circ = 382 \frac{in}{s^2} \cdot \left(\cos 75^\circ \cdot \hat{x} + \sin 75^\circ \cdot \hat{y}\right)$
Version B	$\underline{a}^{N}_{B_2C} = 16.6^2 \cdot 3.82'' \angle 75^\circ = 1052.64 \frac{in}{s^2} \cdot \left(\cos 75^\circ \cdot \hat{x} + \sin 75^\circ \cdot \hat{y}\right)$
Version C	$\underline{a}^{N}_{B_2C} = 20.0^2 \cdot 3.82'' \angle 75^\circ = 1528 \frac{in}{s^2} \cdot \left(\cos 75^\circ \cdot \hat{x} + \sin 75^\circ \cdot \hat{y}\right)$

The equation to be solved:

$$\underline{a}_{B_2C} = \underline{a}_{B_2} = \ddot{\underline{r}}_{B_2C} + \underline{a}^{T}_{B_2C} + \underline{a}^{C}_{B_2C} + \underline{a}^{N}_{B_2C}$$

Version A

$$1381.7 \cdot \left(\cos 45^\circ \cdot \hat{x} + \sin 45^\circ \cdot \hat{y}\right) = \ddot{r} \cdot \left(\cos 75^\circ \cdot \hat{x} + \sin 75^\circ \cdot \hat{y}\right) + \left|\underline{a}^{T}_{B_2C}\right| \cdot \left(\cos 345^\circ \cdot \hat{x} + \sin 345^\circ \cdot \hat{y}\right) +$$
$$+ 438 \cdot \left(\cos 345^\circ \cdot \hat{x} + \sin 345^\circ \cdot \hat{y}\right) + 382 \cdot \left(\cos 75^\circ \cdot \hat{x} + \sin 75^\circ \cdot \hat{y}\right)$$

$$\begin{bmatrix} \ddot{r} \\ \left|\underline{a}^{T}_{B_2C}\right| \end{bmatrix} = \begin{bmatrix} \cos 75^\circ & \cos 345^\circ \\ \sin 75^\circ & \sin 345^\circ \end{bmatrix}^{-1} \cdot \begin{bmatrix} 1381.7 \cdot \cos 45^\circ - 438 \cdot \cos 345^\circ - 382 \cdot \cos 75^\circ \\ 1381.7 \cdot \sin 45^\circ - 438 \cdot \sin 345^\circ - 382 \cdot \sin 75^\circ \end{bmatrix}$$

$$\begin{bmatrix} \ddot{r} \\ \left|\underline{a}^{T}_{B_2C}\right| \end{bmatrix} = \begin{bmatrix} 814.59 \\ 252.85 \end{bmatrix} \frac{in}{s^2}$$

RESULTS:

$$\ddot{r} = 814.59 \frac{in}{s^2}$$

$$\alpha_4 = \frac{\left|\underline{a}^{T}_{B_2C}\right|}{\overline{BC}} = \frac{252.85}{3.82} = 66.19 \frac{rad}{s^2}$$

Version B

$$3838.2\cdot\left(\cos 45^\circ\cdot\hat{x}+\sin 45^\circ\cdot\hat{y}\right)=\ddot{r}\cdot\left(\cos 75^\circ\cdot\hat{x}+\sin 75^\circ\cdot\hat{y}\right)+\left|\underline{a}^{T}_{B_2C}\right|\cdot\left(\cos 345^\circ\cdot\hat{x}+\sin 345^\circ\cdot\hat{y}\right)+$$

$$+1215.12\cdot\left(\cos 345^\circ\cdot\hat{x}+\sin 345^\circ\cdot\hat{y}\right)+1052.64\cdot\left(\cos 75^\circ\cdot\hat{x}+\sin 75^\circ\cdot\hat{y}\right)$$

$$\begin{bmatrix}\ddot{r}\\ \left|\underline{a}^{T}_{B_2C}\right|\end{bmatrix}=\begin{bmatrix}\cos 75^\circ & \cos 345^\circ\\ \sin 75^\circ & \sin 345^\circ\end{bmatrix}^{-1}\cdot\begin{bmatrix}3838.2\cdot\cos 45^\circ-1215.12\cdot\cos 345^\circ-1052.64\cdot\cos 75^\circ\\ 3838.2\cdot\sin 45^\circ-1215.12\cdot\sin 345^\circ-1052.64\cdot\sin 75^\circ\end{bmatrix}$$

$$\begin{bmatrix}\ddot{r}\\ \left|\underline{a}^{T}_{B_2C}\right|\end{bmatrix}=\begin{bmatrix}2271.34\\ 703.98\end{bmatrix}\frac{in}{s^2}$$

RESULTS:

$$\ddot{r}=2271.34\frac{in}{s^2}$$

$$\alpha_4=\frac{\left|\underline{a}^{T}_{B_2C}\right|}{\overline{BC}}=\frac{703.98}{3.82}=184.3\frac{rad}{s^2}$$

Version C

$$5527\cdot\left(\cos 45^\circ\cdot\hat{x}+\sin 45^\circ\cdot\hat{y}\right)=\ddot{r}\cdot\left(\cos 75^\circ\cdot\hat{x}+\sin 75^\circ\cdot\hat{y}\right)+\left|\underline{a}^{T}_{B_2C}\right|\cdot\left(\cos 345^\circ\cdot\hat{x}+\sin 345^\circ\cdot\hat{y}\right)+$$

$$+1756\cdot\left(\cos 345^\circ\cdot\hat{x}+\sin 345^\circ\cdot\hat{y}\right)+1528\cdot\left(\cos 75^\circ\cdot\hat{x}+\sin 75^\circ\cdot\hat{y}\right)$$

$$\begin{bmatrix}\ddot{r}\\ \left|\underline{a}^{T}_{B_2C}\right|\end{bmatrix}=\begin{bmatrix}\cos 75^\circ & \cos 345^\circ\\ \sin 75^\circ & \sin 345^\circ\end{bmatrix}^{-1}\cdot\begin{bmatrix}5527\cdot\cos 45^\circ-1756\cdot\cos 345^\circ-1528\cdot\cos 75^\circ\\ 5527\cdot\sin 45^\circ-1756\cdot\sin 345^\circ-1528\cdot\sin 75^\circ\end{bmatrix}$$

$$\begin{bmatrix}\ddot{r}\\ \left|\underline{a}^{T}_{B_2C}\right|\end{bmatrix}=\begin{bmatrix}3258.52\\ 1007.5\end{bmatrix}\frac{in}{s^2}$$

RESULTS:

$$\ddot{r}=3258.52\frac{in}{s^2}$$

$$\alpha_4=\frac{\left|\underline{a}^{T}_{B_2C}\right|}{\overline{BC}}=\frac{1007.5}{3.82}=263.7\frac{rad}{s^2}$$

GRAPHICAL SOLUTION

From the above solution:

$$\underline{a}_{B_2C} = \underline{a}_{B_2} = \underline{\ddot{r}}_{B_2C} + \underline{a}^{T}_{B_2C} + \underline{a}^{C}_{B_2C} + \underline{a}^{N}_{B_2C}$$

Version A	Version B	Version C
$\underline{a}_{B_2} = 1381.7\angle 45^\circ$	$\underline{a}_{B_2} = 3838.2\angle 45^\circ$	$\underline{a}_{B_2} = 5527\angle 45^\circ$
$\underline{\ddot{r}}_{B_2C} = \ddot{r}\angle // \overline{BC}$	$\underline{\ddot{r}}_{B_2C} = \ddot{r}\angle // \overline{BC}$	$\underline{\ddot{r}}_{B_2C} = \ddot{r}\angle // \overline{BC}$
$\underline{a}^{T}_{B_2C} = \left\lvert\underline{a}^{T}_{B_2C}\right\rvert\angle \perp \overline{BC}$	$\underline{a}^{T}_{B_2C} = \left\lvert\underline{a}^{T}_{B_2C}\right\rvert\angle \perp \overline{BC}$	$\underline{a}^{T}_{B_2C} = \left\lvert\underline{a}^{T}_{B_2C}\right\rvert\angle \perp \overline{BC}$
$\underline{a}^{C}_{B_2C} = 438\frac{in}{s^2}\angle 345^\circ$	$\underline{a}^{C}_{B_2C} = 1215.12\frac{in}{s^2}\angle 345^\circ$	$\underline{a}^{C}_{B_2C} = 1756\frac{in}{s^2}\angle 345^\circ$
$\underline{a}^{N}_{B_2C} = 382\frac{in}{s^2}\angle 75^\circ$	$\underline{a}^{N}_{B_2C} = 1052.64\frac{in}{s^2}\angle 75^\circ$	$\underline{a}^{N}_{B_2C} = 1528\frac{in}{s^2}\angle 75^\circ$

The solution:

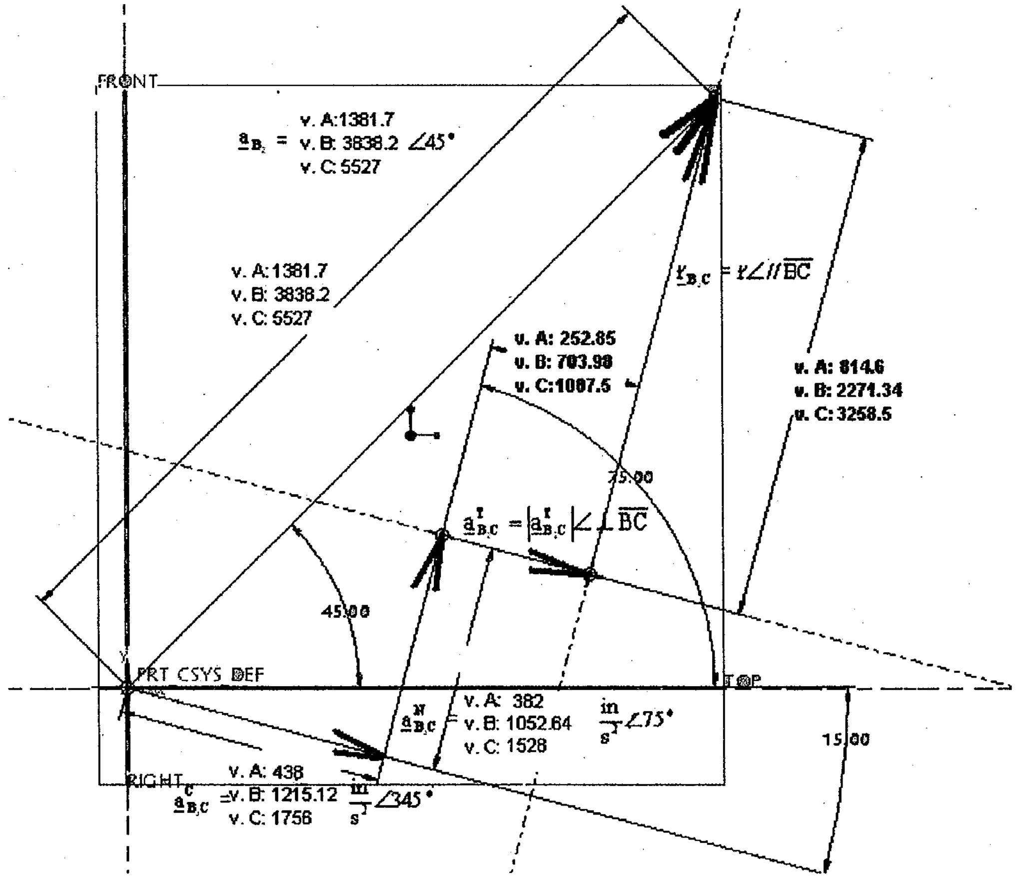

Version A	Version B	Version C
$\ddot{r} = 814.6 \frac{in}{s^2}$ $\left\|\underline{a}^{T}_{B_2C}\right\| = 253 \frac{in}{s^2}$ $\alpha_4 = \frac{\left\|\underline{a}^{T}_{B_2C}\right\|}{\overline{BC}} = \frac{253}{3.82}$ $\alpha_4 = 66.2 \frac{rad}{s^2}$	$\ddot{r} = 2271.3 \frac{in}{s^2}$ $\left\|\underline{a}^{T}_{B_2C}\right\| = 704 \frac{in}{s^2}$ $\alpha_4 = \frac{\left\|\underline{a}^{T}_{B_2C}\right\|}{\overline{BC}} = \frac{704}{3.82}$ $\alpha_4 = 184.3 \frac{rad}{s^2}$	$\ddot{r} = 3258.5 \frac{in}{s^2}$ $\left\|\underline{a}^{T}_{B_2C}\right\| = 1007.5 \frac{in}{s^2}$ $\alpha_4 = \frac{\left\|\underline{a}^{T}_{B_2C}\right\|}{\overline{BC}} = \frac{1007.5}{3.82}$ $\alpha_4 = 263.7 \frac{rad}{s^2}$

QUESTION 2

		Version A		Version B		Version C	
Int. #	Motion	Hi [mm]	ti [s]	Hi [mm]	ti [s]	Hi [mm]	ti [s]
1	Harmonic - rise	5	0.2	6	0.4	4	0.3
2	dwell	-	0.3	-	0.3	-	0.5
3	Cycloidal - return	5	0.3	6	0.4	4	0.3
4	dwell	-	0.2	-	0.1	-	0.1

Version A	Version B	Version C
$t_{total}=\sum t_i=0.2+0.3+$ $+0.3+0.2=1.0\,[s]$ $\omega=\frac{360^\circ}{1.0s}=360\,{}^\circ\!/_s$ $\beta_1=\omega\cdot t_1=72^\circ$ $\beta_2=\omega\cdot t_2=108^\circ$ $\beta_3=.....=108^\circ$ $\beta_4=.....=72^\circ$ $\left(\text{Check}:\sum\beta_i=360^\circ\right)$	$t_{total}=\sum t_i=0.4+0.3+$ $+0.4+0.1=1.2\,[s]$ $\omega=\frac{360^\circ}{1.2s}=300\,{}^\circ\!/_s$ $\beta_1=\omega\cdot t_1=120^\circ$ $\beta_2=\omega\cdot t_2=90^\circ$ $\beta_3=.....=120^\circ$ $\beta_4=.....=30^\circ$ $\left(\text{Check}:\sum\beta_i=360^\circ\right)$	$t_{total}=\sum t_i=0.3+0.5+$ $+0.3+0.1=1.2\,[s]$ $\omega=\frac{360^\circ}{1.2s}=300\,{}^\circ\!/_s$ $\beta_1=\omega\cdot t_1=90^\circ$ $\beta_2=\omega\cdot t_2=150^\circ$ $\beta_3=.....=90^\circ$ $\beta_4=.....=30^\circ$ $\left(\text{Check}:\sum\beta_i=360^\circ\right)$

Interval # 1

Version A	Version B	Version C
$0<\phi<\beta_1$ $0<\phi<72^\circ$ $y_o=0$ $\phi_o=0$ $y=y_0+$ $+\frac{H_1}{2}\cdot\left(1-\cos\left(\frac{\pi\cdot(\phi-\phi_o)}{\beta_1}\right)\right)$ $y=\frac{5}{2}\cdot\left(1-\cos\left(\frac{\pi\cdot\phi}{72^\circ}\right)\right)\text{mm}$	$0<\phi<\beta_1$ $0<\phi<120^\circ$ $y_o=0$ $\phi_o=0$ $y=y_0+$ $+\frac{H_1}{2}\cdot\left(1-\cos\left(\frac{\pi\cdot(\phi-\phi_o)}{\beta_1}\right)\right)$ $y=\frac{6}{2}\cdot\left(1-\cos\left(\frac{\pi\cdot\phi}{120^\circ}\right)\right)\text{mm}$	$0<\phi<\beta_1$ $0<\phi<90^\circ$ $y_o=0$ $\phi_o=0$ $y=y_0+$ $+\frac{H_1}{2}\cdot\left(1-\cos\left(\frac{\pi\cdot(\phi-\phi_o)}{\beta_1}\right)\right)$ $y=\frac{4}{2}\cdot\left(1-\cos\left(\frac{\pi\cdot\phi}{90^\circ}\right)\right)\text{mm}$

Interval # 2

Version A	Version B	Version C
$\beta_1 < \phi < \beta_1 + \beta_2$ $72^\circ < \phi < 180^\circ$ $y = H_1$ $y = 5$ mm	$\beta_1 < \phi < \beta_1 + \beta_2$ $120^\circ < \phi < 210^\circ$ $y = H_1$ $y = 6$ mm	$\beta_1 < \phi < \beta_1 + \beta_2$ $90^\circ < \phi < 240^\circ$ $y = H_1$ $y = 4$ mm

Interval # 3

Version A	Version B	Version C
$\beta_1 + \beta_2 < \phi < \beta_1 + \beta_2 + \beta_3$ $180^\circ < \phi < 288^\circ$ $y_o = H_1 - H_3 = 0$ $\phi_o = 180^\circ$ $y = y_0 + H_3 \cdot$ $\cdot\left(\begin{matrix} 1 - \frac{(\phi - \phi_0)}{\beta_3} + \\ + \frac{1}{2\pi}\sin\left(\frac{2\pi(\phi - \phi_0)}{\beta_3}\right)\end{matrix}\right)$ $y = 5.0 \cdot$ $\cdot\left(\begin{matrix} 1 - \frac{(\phi - 180^\circ)}{108^\circ} + \\ + \frac{1}{2\pi}\sin\left(\frac{2\pi(\phi - 180^\circ)}{108^\circ}\right)\end{matrix}\right)$	$\beta_1 + \beta_2 < \phi < \beta_1 + \beta_2 + \beta_3$ $210^\circ < \phi < 330^\circ$ $y_o = H_1 - H_3 = 0$ $\phi_o = 210^\circ$ $y = y_0 + H_3 \cdot$ $\cdot\left(\begin{matrix} 1 - \frac{(\phi - \phi_0)}{\beta_3} + \\ + \frac{1}{2\pi}\sin\left(\frac{2\pi(\phi - \phi_0)}{\beta_3}\right)\end{matrix}\right)$ $y = 6.0 \cdot$ $\cdot\left(\begin{matrix} 1 - \frac{(\phi - 210^\circ)}{120^\circ} + \\ + \frac{1}{2\pi}\sin\left(\frac{2\pi(\phi - 210^\circ)}{120^\circ}\right)\end{matrix}\right)$	$\beta_1 + \beta_2 < \phi < \beta_1 + \beta_2 + \beta_3$ $240^\circ < \phi < 330^\circ$ $y_o = H_1 - H_3 = 0$ $\phi_o = 240^\circ$ $y = y_0 + H_3 \cdot$ $\cdot\left(\begin{matrix} 1 - \frac{(\phi - \phi_0)}{\beta_3} + \\ + \frac{1}{2\pi}\sin\left(\frac{2\pi(\phi - \phi_0)}{\beta_3}\right)\end{matrix}\right)$ $y = 4.0 \cdot$ $\cdot\left(\begin{matrix} 1 - \frac{(\phi - 240^\circ)}{90^\circ} + \\ + \frac{1}{2\pi}\sin\left(\frac{2\pi(\phi - 240^\circ)}{90^\circ}\right)\end{matrix}\right)$

Interval # 4

Version A	Version B	Version C
$(\beta_1 + \beta_2 + \beta_3) < \phi < (\beta_1 +$ $+ \beta_2 + \beta_3 + \beta_4)$ $288^\circ < \phi < 360^\circ$ $y = H_1 - H_3 = H_5$ $y = 0.0$ mm	$(\beta_1 + \beta_2 + \beta_3) < \phi < (\beta_1 +$ $+ \beta_2 + \beta_3 + \beta_4)$ $330^\circ < \phi < 360^\circ$ $y = H_1 - H_3 = H_5$ $y = 0.0$ mm	$(\beta_1 + \beta_2 + \beta_3) < \phi < (\beta_1 +$ $+ \beta_2 + \beta_3 + \beta_4)$ $330^\circ < \phi < 360^\circ$ $y = H_1 - H_3 = H_5$ $y = 0.0$ mm

Calculate the follower displacement diagram at:

Version	ϕ [°]	y [mm]
A	30	$\frac{5}{2}\cdot\left(1-\cos\left(\frac{\pi\cdot 30^\circ}{72^\circ}\right)\right)=1.853$
	200	$5.0\cdot\left(1-\frac{(200^\circ-180^\circ)}{108^\circ}+\frac{1}{2\pi}\sin\left(\frac{2\pi(200^\circ-180^\circ)}{108^\circ}\right)\right)=4.805$
B	30	$\frac{6}{2}\cdot\left(1-\cos\left(\frac{\pi\cdot 30^\circ}{120^\circ}\right)\right)=0.879$
	290	$6.0\cdot\left(1-\frac{(290^\circ-210^\circ)}{120^\circ}+\frac{1}{2\pi}\sin\left(\frac{2\pi(290^\circ-210^\circ)}{120^\circ}\right)\right)=1.173$
C	30	$\frac{4}{2}\cdot\left(1-\cos\left(\frac{\pi\cdot 30^\circ}{90^\circ}\right)\right)=1.0$
	290	$4.0\cdot\left(1-\frac{(290^\circ-240^\circ)}{90^\circ}+\frac{1}{2\pi}\sin\left(\frac{2\pi(290^\circ-240^\circ)}{90^\circ}\right)\right)=1.56$

In-line roller follower

$$\alpha=\tan^{-1}\left(\frac{y'}{R_b+R_f+y}\right)$$
$$r\approx R_b+R_f\cdot(1-\cos\alpha)+y$$
$$r_X=r\cdot\sin\phi$$
$$r_Y=r\cdot\cos\phi$$

Int. #	Version A	Version B	Version C
1	$0<\phi<72^\circ$ $y'=\frac{\pi\cdot H_1}{2\cdot\beta_1}\cdot\sin\left(\frac{\pi\cdot(\phi-\phi_o)}{\beta_1}\right)$ $=\frac{\pi\cdot 5}{2\cdot\left(\frac{\pi\cdot 72^\circ}{180^\circ}\right)}\cdot\sin\left(\frac{\pi\cdot\phi}{72^\circ}\right)$	$0<\phi<120^\circ$ $y'=\frac{\pi\cdot H_1}{2\cdot\beta_1}\cdot\sin\left(\frac{\pi\cdot(\phi-\phi_o)}{\beta_1}\right)$ $=\frac{\pi\cdot 6}{2\cdot\left(\frac{\pi\cdot 120^\circ}{180^\circ}\right)}\cdot\sin\left(\frac{\pi\cdot\phi}{120^\circ}\right)$	$0<\phi<90^\circ$ $y'=\frac{\pi\cdot H_1}{2\cdot\beta_1}\cdot\sin\left(\frac{\pi\cdot(\phi-\phi_o)}{\beta_1}\right)$ $=\frac{\pi\cdot 4}{2\cdot\left(\frac{\pi\cdot 90^\circ}{180^\circ}\right)}\cdot\sin\left(\frac{\pi\cdot\phi}{90^\circ}\right)$
2	$72^\circ<\phi<180^\circ$ $y'=0$	$120^\circ<\phi<210^\circ$ $y'=0$	$90^\circ<\phi<240^\circ$ $y'=0$
3	$180^\circ<\phi<288^\circ$ $y'=-\frac{H_3}{\beta_3}\cdot\left(1-\cos\left(\frac{2\cdot\pi\cdot(\phi-\phi_o)}{\beta_3}\right)\right)=$ $-\frac{5}{\left(\frac{\pi\cdot 108^\circ}{180^\circ}\right)}\cdot\left(1-\cos\left(\frac{2\cdot\pi\cdot(\phi-180^\circ)}{108^\circ}\right)\right)$	$210^\circ<\phi<330^\circ$ $y'=-\frac{H_3}{\beta_3}\cdot\left(1-\cos\left(\frac{2\cdot\pi\cdot(\phi-\phi_o)}{\beta_3}\right)\right)=$ $-\frac{6}{\left(\frac{\pi\cdot 120^\circ}{180^\circ}\right)}\cdot\left(1-\cos\left(\frac{2\cdot\pi\cdot(\phi-210^\circ)}{120^\circ}\right)\right)$	$240^\circ<\phi<330^\circ$ $y'=-\frac{H_3}{\beta_3}\cdot\left(1-\cos\left(\frac{2\cdot\pi\cdot(\phi-\phi_o)}{\beta_3}\right)\right)=$ $-\frac{4}{\left(\frac{\pi\cdot 90^\circ}{180^\circ}\right)}\cdot\left(1-\cos\left(\frac{2\cdot\pi\cdot(\phi-240^\circ)}{90^\circ}\right)\right)$
4	$288^\circ<\phi<360^\circ$ $y'=0$	$330^\circ<\phi<360^\circ$ $y'=0$	$330^\circ<\phi<360^\circ$ $y'=0$

Calculate the cam profile, r, at:

Version	ϕ [°]	Calculations
A	30	$y'=\frac{\pi\cdot 5}{2\cdot\left(\frac{\pi\cdot 72^\circ}{180^\circ}\right)}\cdot\sin\left(\frac{\pi\cdot 30^\circ}{720^\circ}\right)=6.037[\mathrm{mm/rad}]$ $\alpha=\tan^{-1}\left(\frac{y'}{18+3+y}\right)=14.8^\circ$ $r=18+3\cdot(1-\cos\alpha)+y=19.952\,[\mathrm{mm}]$
	200	$y'=-\frac{5}{\left(\frac{\pi\cdot 108^\circ}{180^\circ}\right)}\cdot\left(1-\cos\left(\frac{2\cdot\pi\cdot(200^\circ-180^\circ)}{108^\circ}\right)\right)=-1.602[\mathrm{mm/rad}]$ $\alpha=\tan^{-1}\left(\frac{y'}{18+3+y}\right)=-3.552^\circ$ $r=18+3\cdot(1-\cos\alpha)+y=22.811[\mathrm{mm}]$

Version	ϕ [°]	Calculations
B	30	$y' = \frac{\pi \cdot 6}{2 \cdot \left(\frac{\pi \cdot 120^\circ}{180^\circ}\right)} \cdot \sin\left(\frac{\pi \cdot 30^\circ}{120^\circ}\right) = 3.182[\mathrm{mm/rad}]$ $\alpha = \tan^{-1}\left(\frac{y'}{18+3+y}\right) = 8.275^\circ$ $r = 18 + 3 \cdot (1 - \cos\alpha) + y = 18.91[\mathrm{mm}]$
	290	$y' = -\frac{6}{\left(\frac{\pi \cdot 120^\circ}{180^\circ}\right)} \cdot \left(1 - \cos\left(\frac{2 \cdot \pi \cdot (290^\circ - 210^\circ)}{120^\circ}\right)\right) = -4.3[\mathrm{mm/rad}]$ $\alpha = \tan^{-1}\left(\frac{y'}{18+3+y}\right) = -10.968^\circ$ $r = 18 + 3 \cdot (1 - \cos\alpha) + y = 19.228[\mathrm{mm}]$
C	30	$y' = \frac{\pi \cdot 4}{2 \cdot \left(\frac{\pi \cdot 90^\circ}{180^\circ}\right)} \cdot \sin\left(\frac{\pi \cdot 30^\circ}{90^\circ}\right) = 3.464[\mathrm{mm/rad}]$ $\alpha = \tan^{-1}\left(\frac{y'}{18+3+y}\right) = 8.948^\circ$ $r = 18 + 3 \cdot (1 - \cos\alpha) + y = 19.037\ [\mathrm{mm}]$
	290	$y' = -\frac{4}{\left(\frac{\pi \cdot 90^\circ}{180^\circ}\right)} \cdot \left(1 - \cos\left(\frac{2 \cdot \pi \cdot (290^\circ - 240^\circ)}{90^\circ}\right)\right) = -4.939\ [\mathrm{mm/rad}]$ $\alpha = \tan^{-1}\left(\frac{y'}{18+3+y}\right) = -12.35^\circ$ $r = 18 + 3 \cdot (1 - \cos\alpha) + y = 19.629[\mathrm{mm}]$

In General:

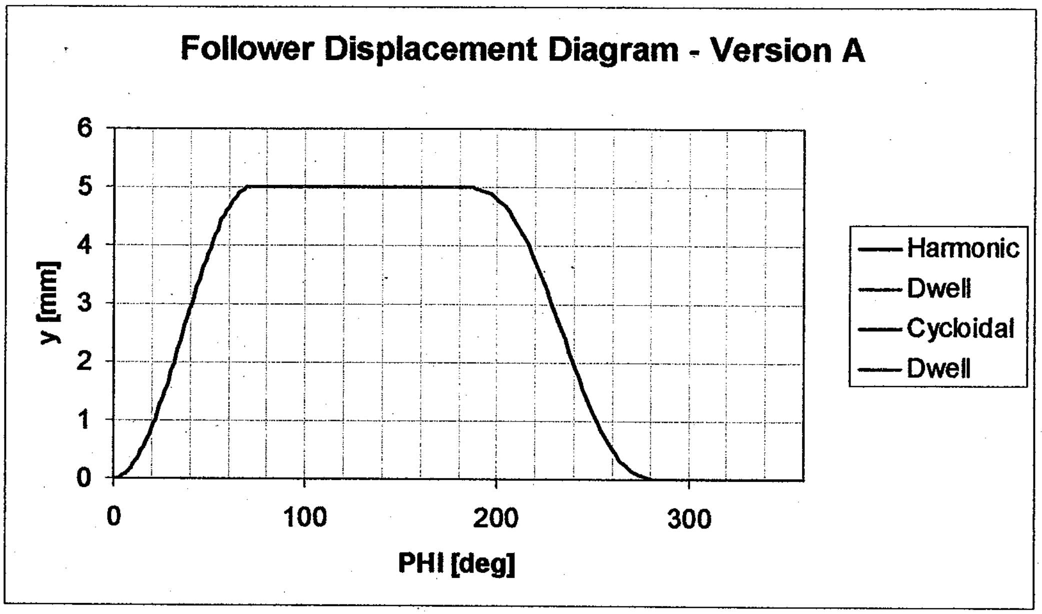
Follower Displacement Diagram - Version A
y [mm]
0
1
2
3
4
5
6
PHI [deg]
0
100
200
300
Harmonic
Dwell
Cycloidal
Dwell

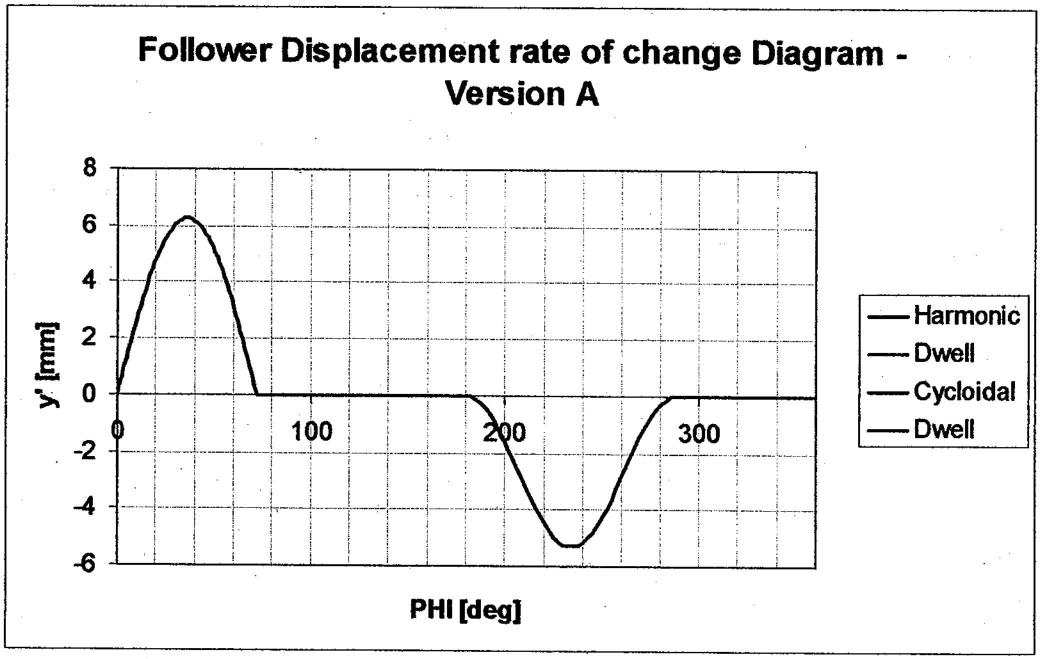
Follower Displacement rate of change Diagram - Version A
y' [mm]
8
6
4
2
0
-2
-4
-6
0
100
200
300
PHI [deg]
Harmonic
Dwell
Cycloidal
Dwell

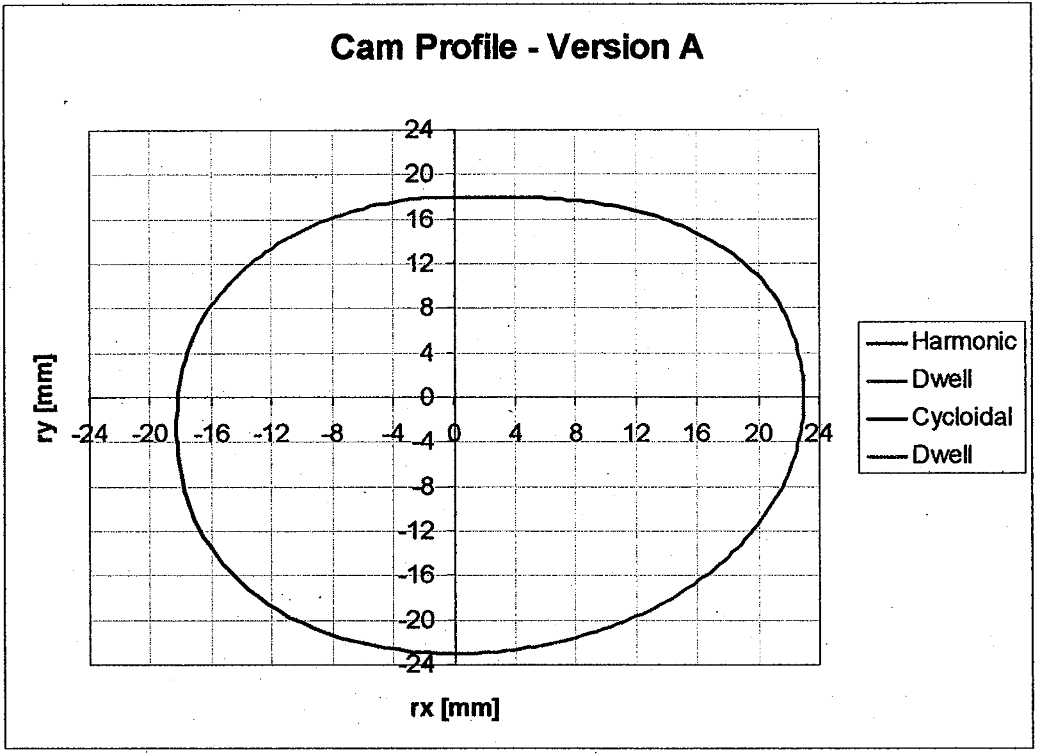
Cam Profile - Version A
24
20
16
12
8
4
0
-4
-8
-12
-16
-20
-24
-24
-20
-16
-12
-8
-4
0
4
8
12
16
20
24
ry [mm]
rx [mm]
Harmonic
Dwell
Cycloidal
Dwell

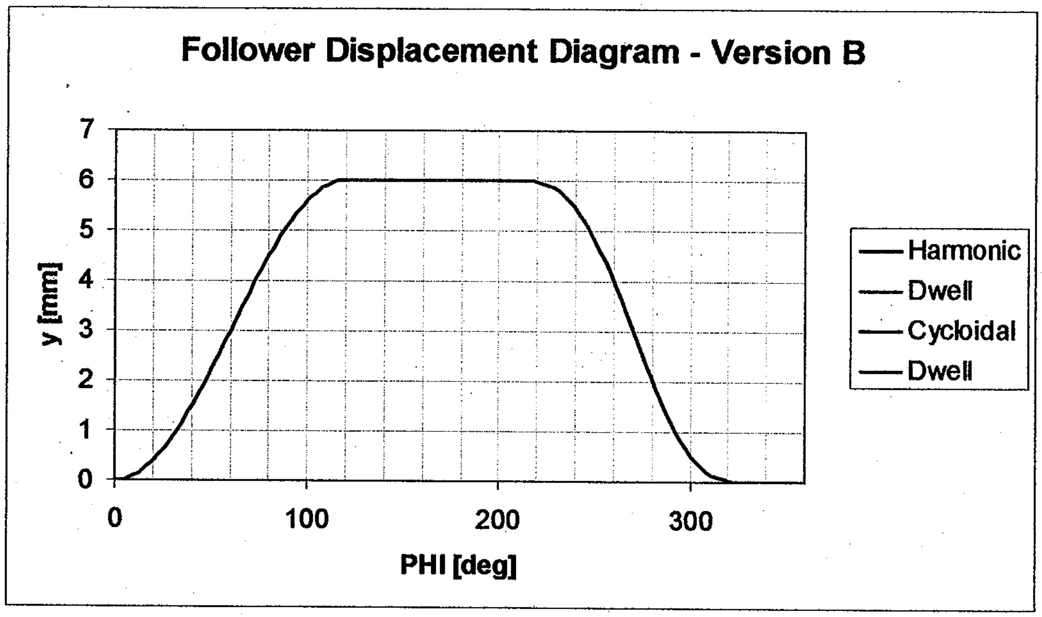
Follower Displacement Diagram - Version B
7
6
5
4
3
2
1
0
y [mm]
0
100
200
300
PHI [deg]
Harmonic
Dwell
Cycloidal
Dwell

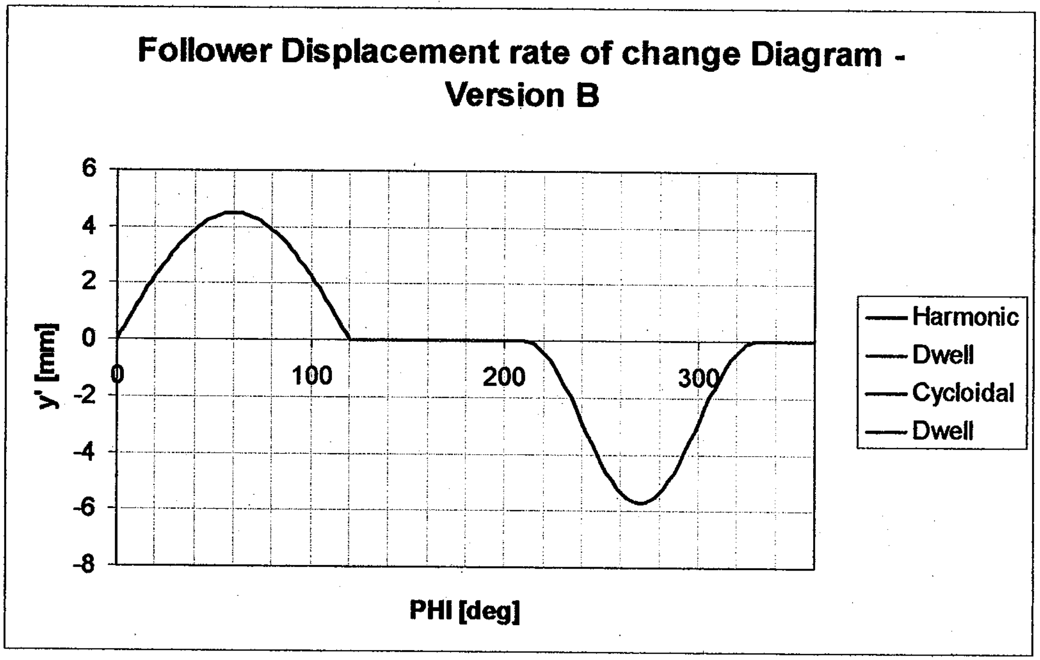
Follower Displacement rate of change Diagram - Version B
6
4
2
0
-2
-4
-6
-8
y' [mm]
0
100
200
300
PHI [deg]
Harmonic
Dwell
Cycloidal
Dwell

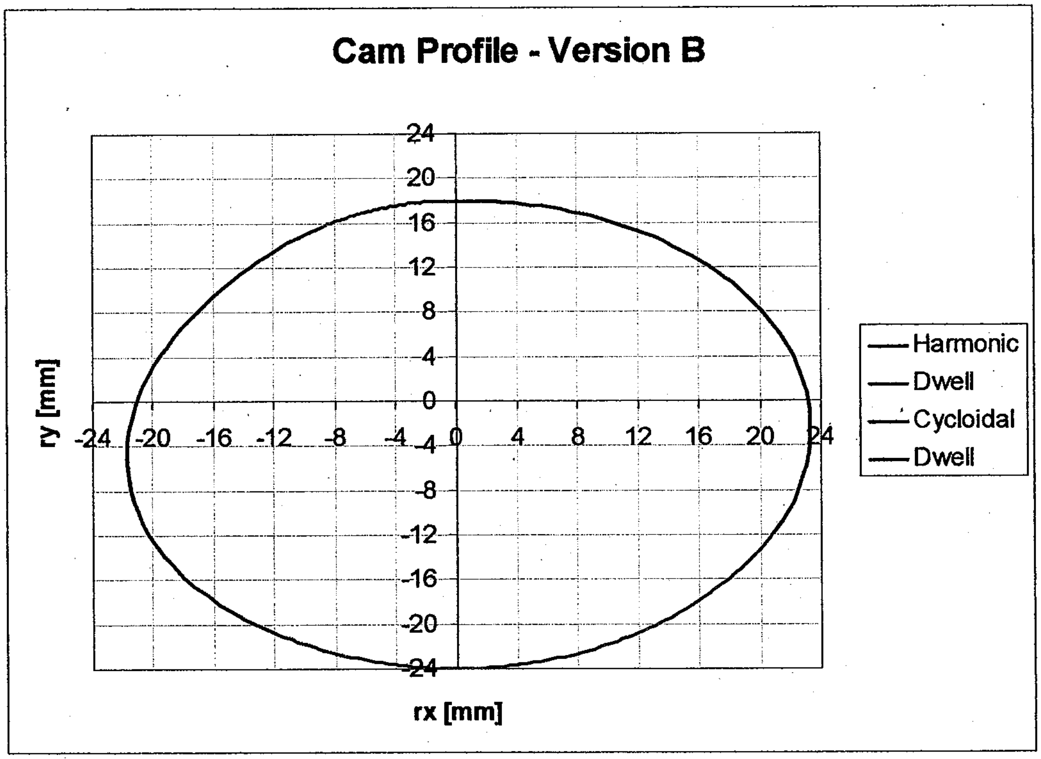
Cam Profile - Version B
ry [mm]
rx [mm]
24
20
16
12
8
4
0
-4
-8
-12
-16
-20
-24
-24
-20
-16
-12
-8
-4
0
4
8
12
16
20
24
Harmonic
Dwell
Cycloidal
Dwell

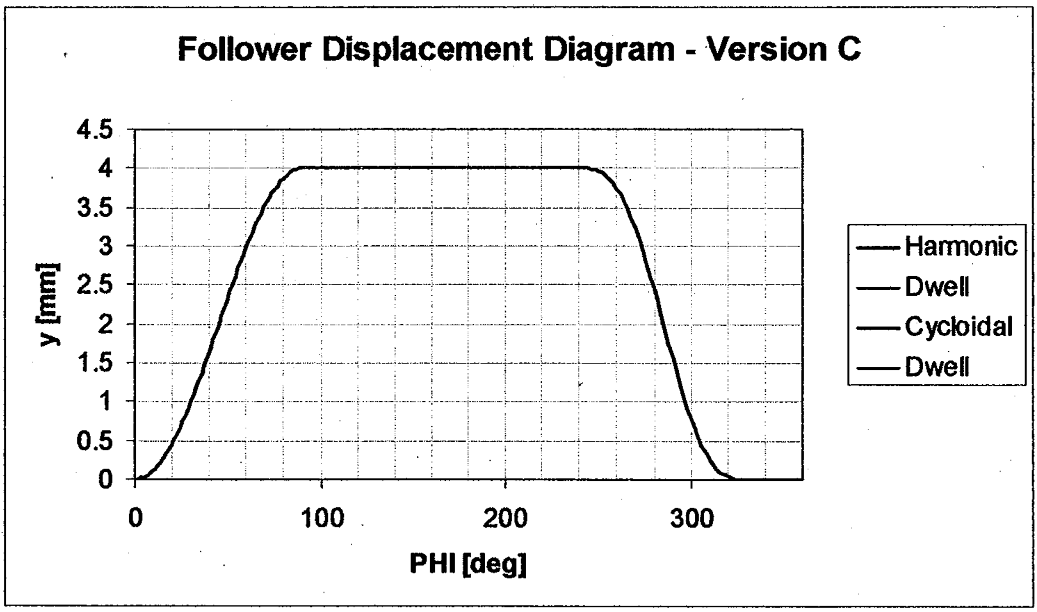
Follower Displacement Diagram - Version C
4.5
4
3.5
3
2.5
2
1.5
1
0.5
0
y [mm]
0
100
200
300
PHI [deg]
Harmonic
Dwell
Cycloidal
Dwell

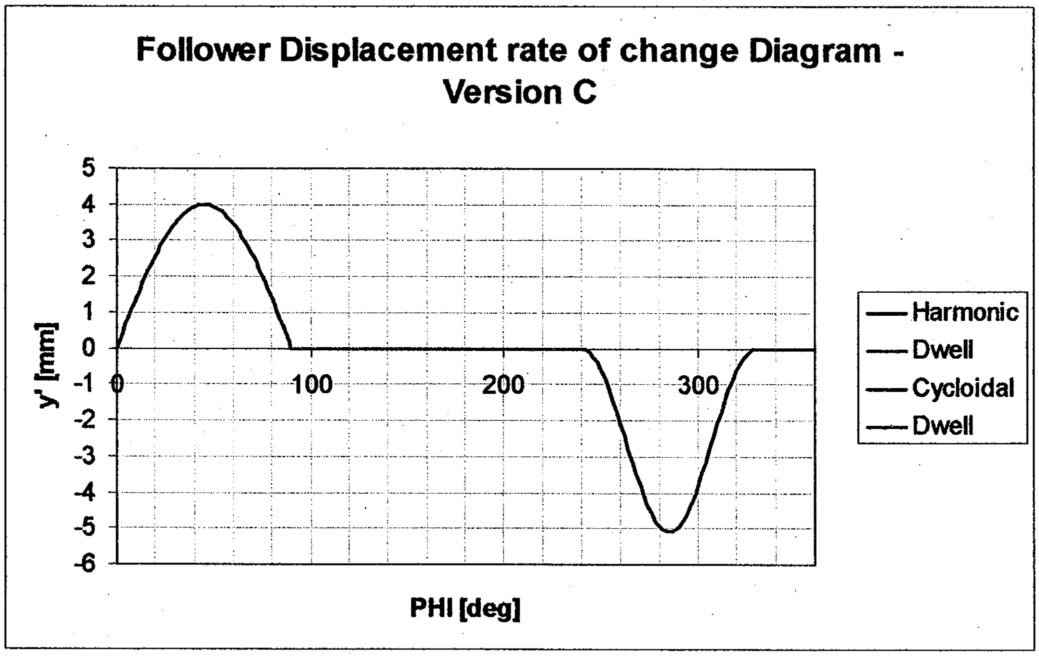
Follower Displacement rate of change Diagram - Version C
5
4
3
2
1
0
-1
-2
-3
-4
-5
-6
y' [mm]
0
100
200
300
PHI [deg]
Harmonic
Dwell
Cycloidal
Dwell

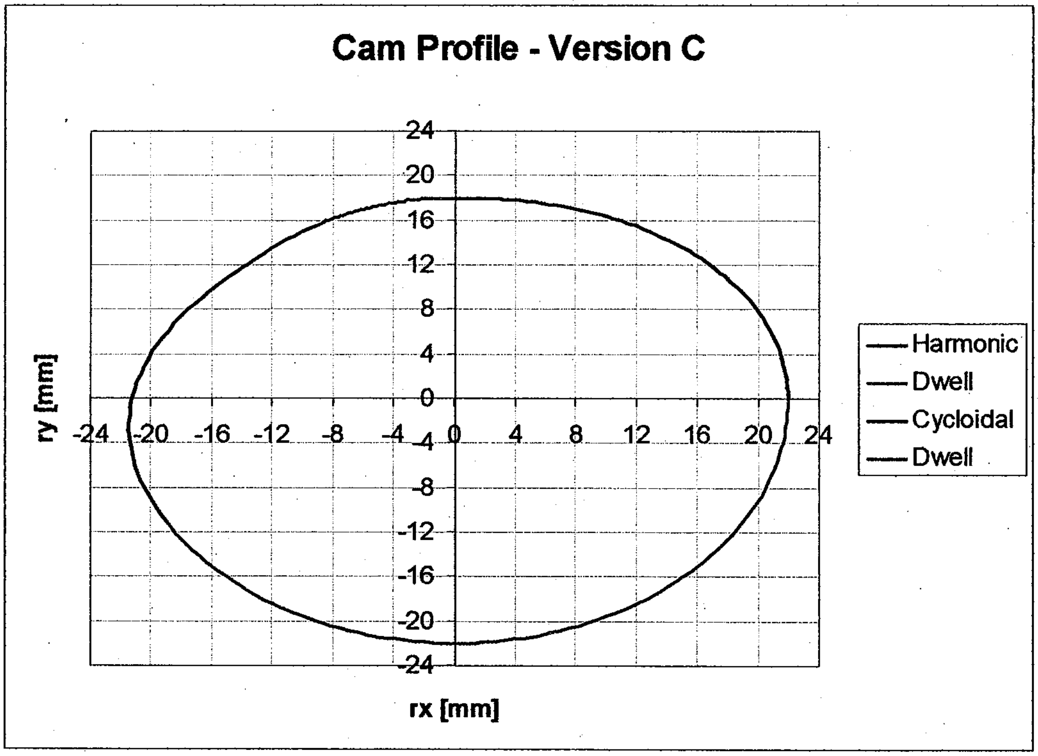
Cam Profile - Version C
ry [mm]
rx [mm]
24
20
16
12
8
4
0
-4
-8
-12
-16
-20
-24
-24 -20 -16 -12 -8 -4 0 4 8 12 16 20 24
Harmonic
Dwell
Cycloidal
Dwell